BIXOLON®
SAMSUNG mini printers

SAMSUNG

CUSTOMER DISPLAY
BCD-1000 Series

SERVICE MANUAL

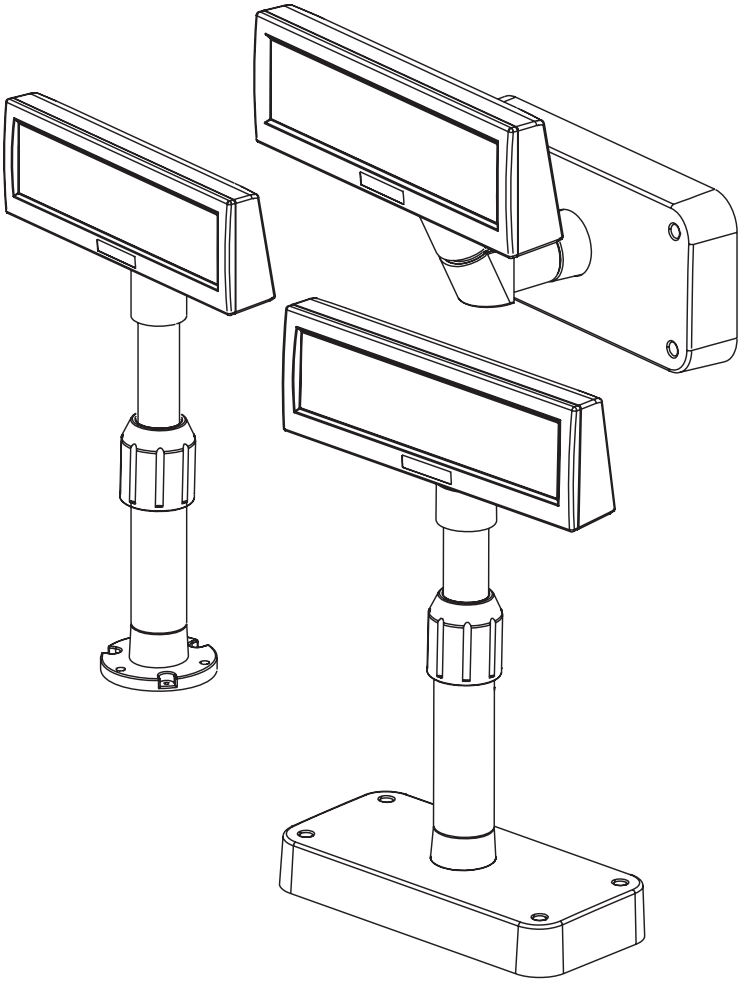

[Contents]

1. General Specifications 2
   1-1 Display Specifications 2
   1-2 Character Specifications 2
   1-3 Display Specifications 2
   1-4 Environmental Conditions 2
   1-5 Overall Specifications 3
   1-6 Accessories 3
   1-7 Accessory 4
2. Interface 5
   2-1 Direct type 5
   2-2 Serial type (Pass through type) 8
   2-3 USB type 14
3. Switches 17
   3-1 Power supply switch 17
   3-2 DIP switches 17
   3-3 Memory Switch 18
4. System Command Details 19
   4-1 Set Communication Option 19
   4-2 Set Baud-rate 19
   4-3 Select Command Emulation Mode 19
   4-4 Save Display Demo Data to EEP-ROM 19
   4-5 Run Demo Message 20
   4-6 Reset EEP-ROM 20
   4-7 Set International Code Set 20
   4-8 Store or Recall Title Data to/from EEP-ROM 20
   4-9 Show Information 21
   4-10 Set Character Code Table 21
5. Control Command List 22
   5-1 BIXOLON's Standard Command List 22
   5-2 EPSON ESC/POS Emulation Mode 23
   5-3 ADM787/788 Emulation Mode 24
   5-4 DSP-800 (Giga Tech) Emulation Mode 24
   5-5 AEDEX Emulation Mode 24
   5-6 UTC Standard Emulation Mode 25
   5-7 UTC Standard Emulation Mode 25
   5-8 CD-5220 (Partner Tech) Emulation Mode 26
   5-9 NCR RealPOS Emulation Mode 27
   5-10 PD6000 (Logic Controls) Emulation Mode 27
   5-11 ICD-2002 (Puritron) Emulation Mode 28
6. Control Command Descriptions 29
7. Code Table 41
8. Disassembly 58
   8-1 VFD Module Ass'y와 Post부위 분리방법 58
   8-2 VFD Module Ass'y의 Panel 분리방법 59
   8-3 Pole 분리방법 59
9. Exploded view and Parts list 60
   9-1 DESK-TOP TYPE VIEW 60
   9-2 DESK-TOP TYPE Parts List 61
   9-3 WALL MOUNT TYPE VIEW 62
   9-4 WALL MOUNT TYPE Parts List 63
   9-4 WALL MOUNT TYPE Parts List 63
10. System Block Diagrams 64
   10-1 System Block Diagram RS-232 64
   10-2 System Block Diagram USB 64
   11-1 Power Problem 65
   11-2 RS-232C Serial Communication Problem 65
   11-2 RS-232C Serial Communication Problem 66
12. PCB Layout and Parts list 68
   12-1 SERIAL PCB(RS-232C) LAYOUT 68
   12-2 USB PCB LAYOUT 70
APPENDIX 1. Virtual COM driver installation (Only BCD-1000U) 72

1. General Specifications

1-1 Display Specifications

1) Vacuum fluorescent display
2) Number of characters : 40 (20 columns x 2 lines)
3) Display color : Green (505 nm)
4) Brightness :

1-2 Character Specifications

1) Character type : Alphanumeric : 95
International characters : 37
Graphic characters : 128 x 13 pages
2) Character font : 5 x 7 dot matrix, cursor
3) Character size : 5.45mm x 9.15mm
Refer to Figure 1-2-1 for details.
4) Character pitch : 8.45mm
Refer to Figure 1-2-1 for details.

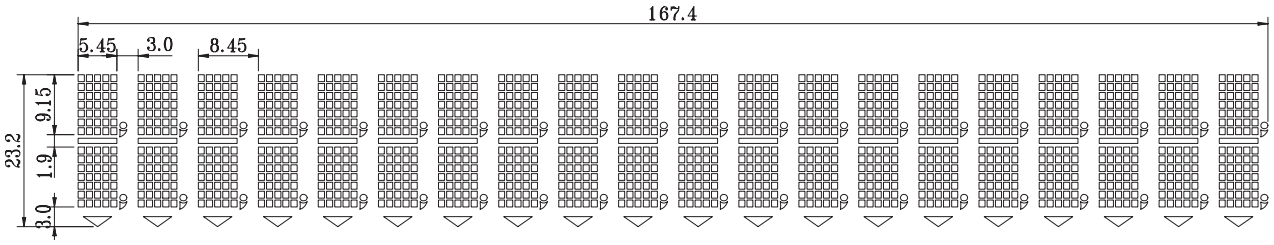

Figure 1-2-1

1-3 Display Specifications

1) Power supply types to be applied :
2) Rated voltage : +5VDC ~ +24VDC
3) Rated current :

1-4 Environmental Conditions

1) Temperature : Operating :
Storage :
2) Humidity : Operating :
Storage :
3) Impact resistance :
When unpacked (with an optional stand) :
Height :
Directions :
No external or internal damage should be found after the drop test (performed when the unit is not operating), and the unit should operate normally.
When packed :
Packing specification :
Height :
Directions :
No external or internal damage should be found after the drop test, and the unit should operate normally.

1-5 Overall Specifications

1-5-1 STAND TYPE

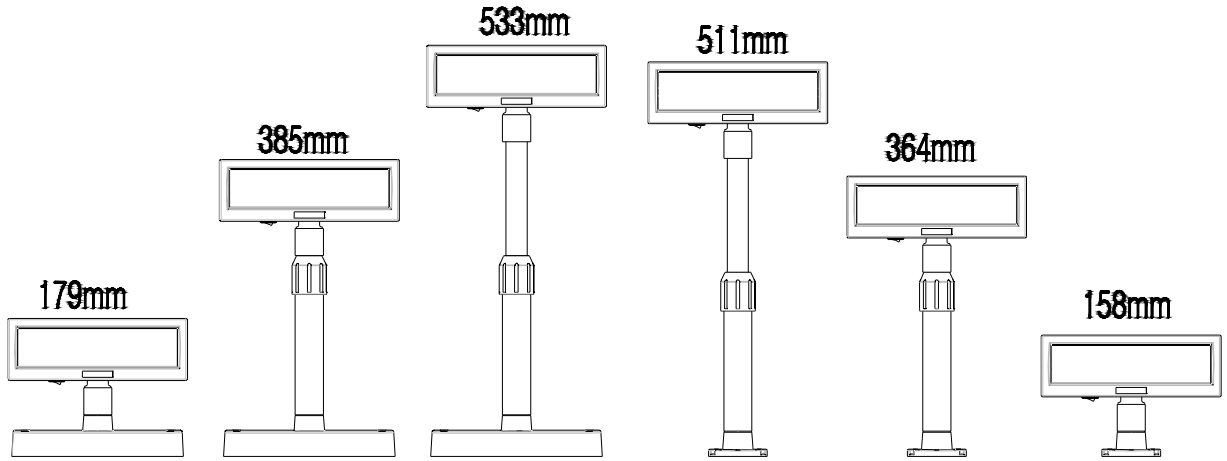

1-5-2 WALL TYPE

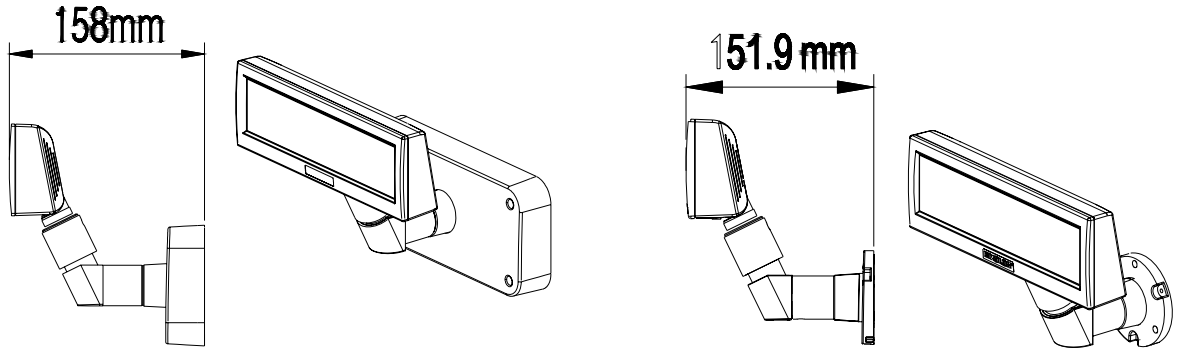

1-5-3 Detail dimension

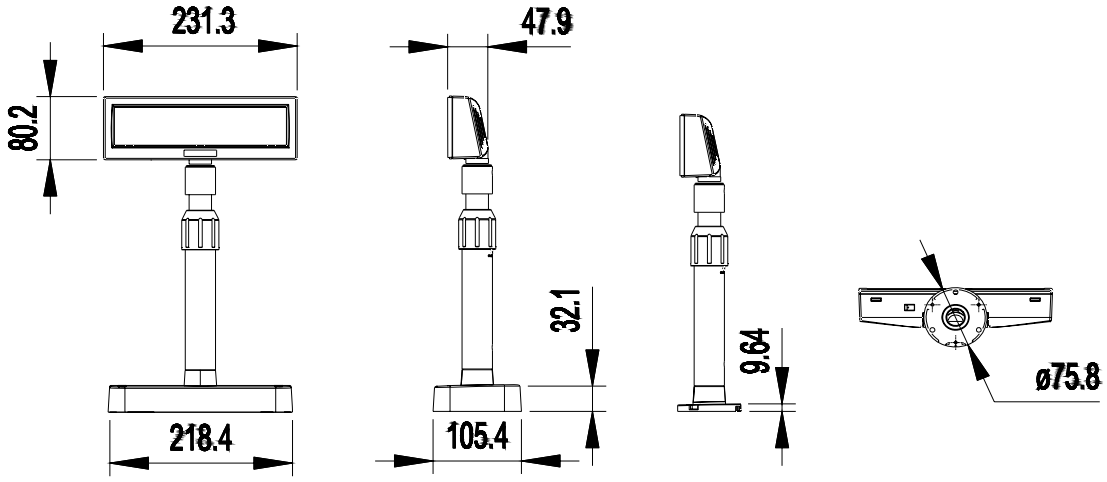

1-6 Accessories

1) Install CD - - - - - - - - 1
2) Quick guide manual - - - - - - - - 1

1-7 Accessory

1) SMPS

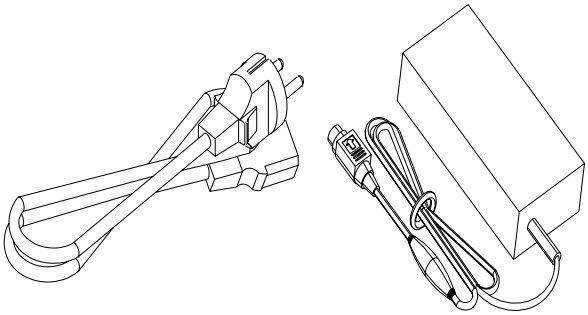

(1) 24V, 2.5A, 3PIN
(2) 24V, 1.5A, 2PIN
(3) 5V, 2.0A, 2PIN

2) CABLES

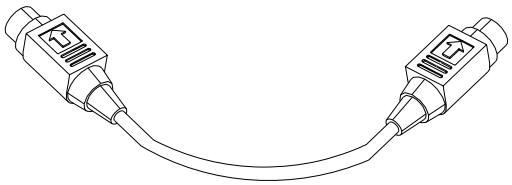 POWER CABLE 3P/3P 1.8M K610-00005B	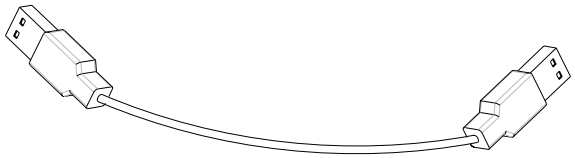 USB CONNECTOR CABLE LENGTH: 1.8M CABLE
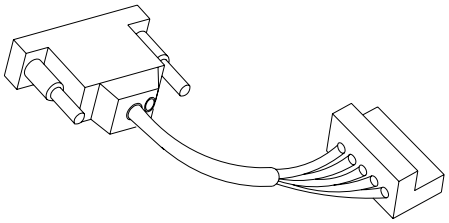 RS-232C & POWER CABLE 일체형 LENGTH: 1.8M	POWER CABLE 3P/2P 1.8M K610-00005G

3) ETC

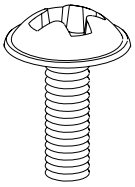 SCREW M3X10, TAPPING	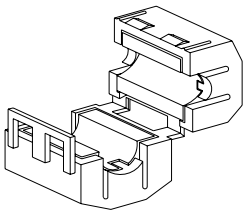 FERRITE CORE USB TYPE ONLY

2. Interface

2-1 Direct type

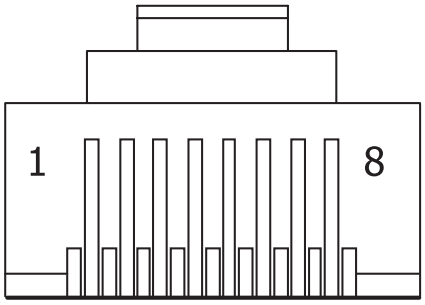

VFD OUTPUT

2-1-1 Interface Specification

1) Data transmission :	**Serial**
2) Synchronization :	**Synchronous**
3) Handshaking (*) :	**DTR/DSR control**
4) Signal levels :	**MARK = -3 to -15 V logic = “1” OFF** **SPACE = +3 to +15 V logic = “0” ON**
5) Baud Rate (*) :	**1200, 2400, 4800, 9600, 19200, 38400, 57600, 115200 bps** **(bps : bits per second)**
6) Data word length (*) :	**7 bits, 8 bits**
7) Parity (*) :	**None, odd, even**
8) Stop bits :	**1 or more**
(*) Selected by the DIP switches.	

Communication Buffer size : 80 bytes

2-1-2 Connector Signal Assignments

Pin Number	Signal Name	Signal Direction	Function
1	FG	-	Frame ground
2	TXD	Output	1) When the BDC-1000 is connected with the data pass through(*1) : Transmit data to the printer 2) When the BDC-1000 is connected in a stand-alone : Transmit data to the host
3	RXD	Input	Receive data from the printer
4	DSR	Input	This indicates whether the printer is ready to receive data. 1) When the BCD-1000 is connected with a data pass through(*1) : [MARK] : The printer is not ready to receive data [SPACE] : The printer is ready to receive data 2) When the BDC-1000 is connected in a stand-alone : [MARK] : The host is not ready to receive data [SPACE] : The host is ready to receive data
5	DTR	Output	This indicates whether the display is ready to receive data (*2). [SPACE] The display can receive data. [MARK] The display cannot receive data. [DTR MARK] DTR goes to MARK under the following conditions : ① The period from when the power is turned on to when the display first becomes ready to receive data. ② When the self-test is executed. ③ when the remaining space in the receive buffer becomes 40bytes or less (buffer-full state). ④ When [DSR MARK] is on, if the printer is selected by a peripheral device command. (When the BCD-1000 is connected with the data pass through.)(*1) [DTR SPACE] DTR goes to SPACE under the following conditions : ① When the display first becomes ready to receive data after power-on. ② When the self-test has ended. ③ when the remaining space in the receive buffer becomes 50bytes or more after it became 40bytes or less once.
6	SG	-	Signal GND
7	PS	-	Power supply terminal
8	PG	-	Flyback line for power supply

NOTES

(*1) For the data pass through and the stand alone, refer to Section 3-2-1 Connection methods for detail.

(*2) [DTR MARK] can be set by the US v command. This case differs from the above-mentioned [DTR MARK]. Refer to the US v command in section 4, Command Description.

2-1-3 Installations

STEP1. Turn the computer system power off.
STEP2. Connect the Display Cable to the RS-232 Port of the Computer.
STEP3. Connect the DC Power source by the appropriate DC Power adapter.
STEP4. Turn on the computer and the power supply unit, The display will be on and ready for receiving data.

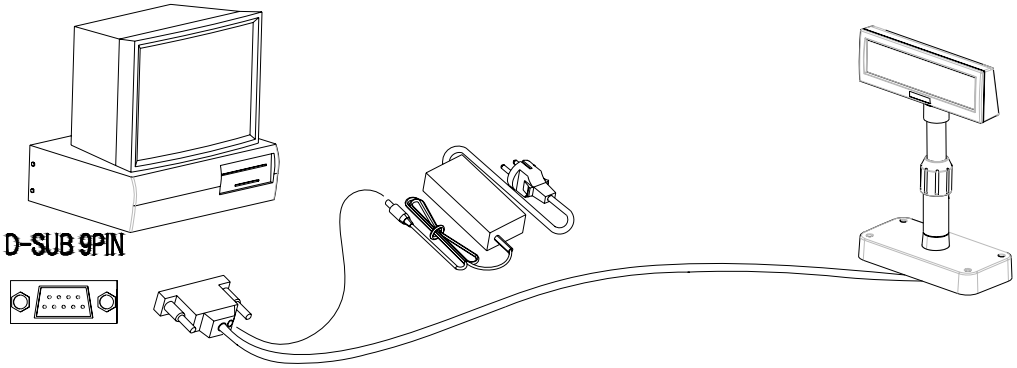

2-1-4 Signal Assignments(Cable-end DSUB)

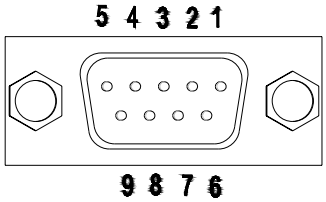

	1	2	3	4	5	6	7	8	9
P.NAME	NC	RXD	TXD	DTR	GND	DSR	RTS	CTS	NC
SHORT CONNEC -TION				●		●	●	●	

2-1-5 DC Power Jack

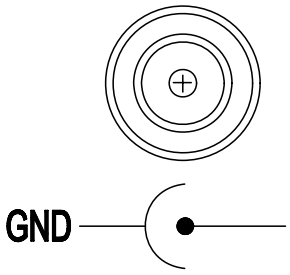

MAX 300 ~ 1350mA. +5VDC ~ +24VDC.

2-2 Serial type (Pass through type)

2-2-1 Connector

The Stand is equipped with an interface board, which has connectors for the display panel, printer, power supply, and host computer.

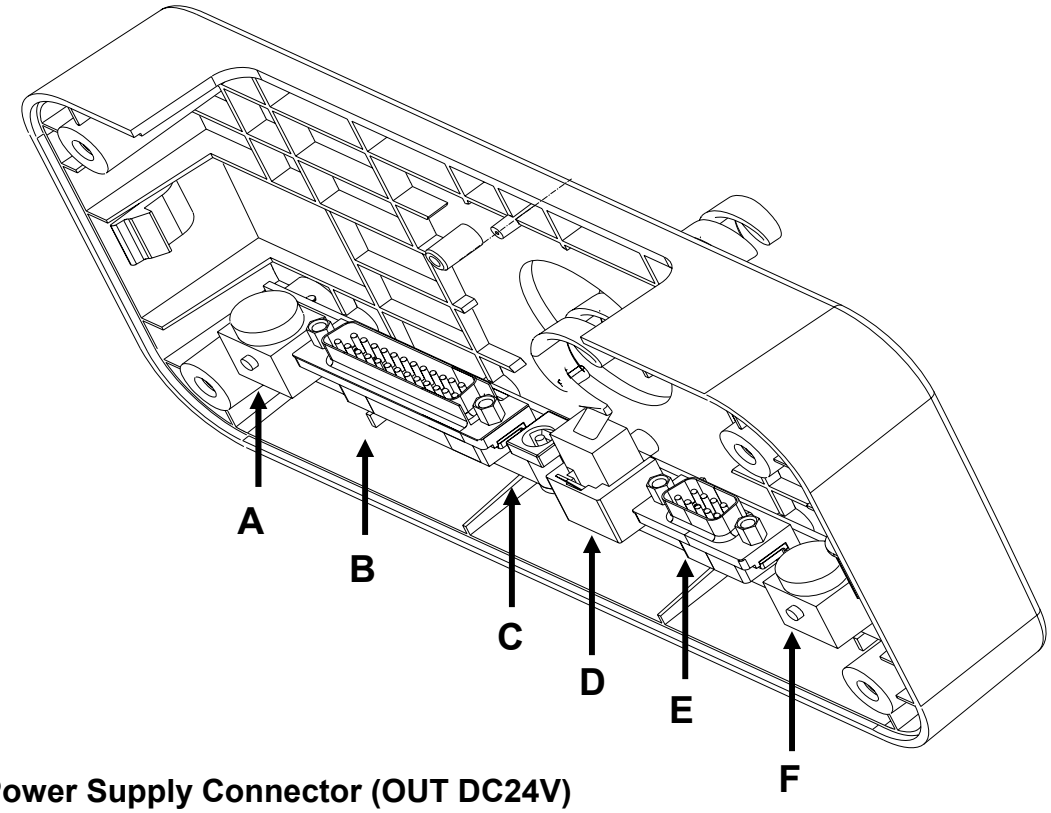

A: Power Supply Connector (OUT DC24V)
B: Host Interface Connector (D-SUB 25pi, Female)
C: Power Supply Connector (IN DC5~24V)
D: Display Unit Connector
E: Printer Interface Connector (D-SUB 9pin, Male)
F: Power Supply Connector (IN DC24V)

2-2-2 Connection diagram

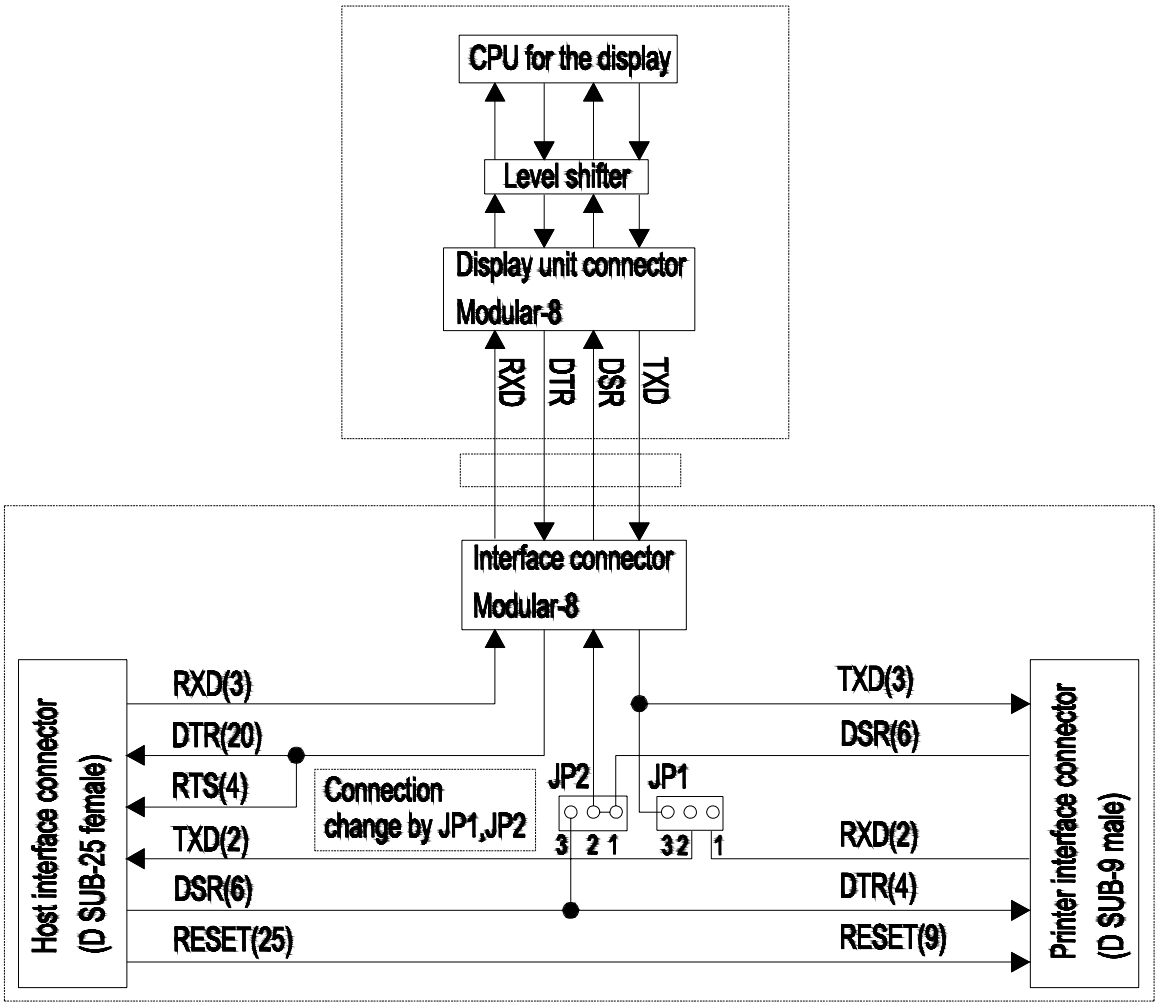

Some functions depend on the device's connection to the BCD-1000, such as whether a printer is connected or not with a data pass through connection, or stand alone connection.

Connection type	JP2	JP2	Function
Data pass though (default setting)	1-2	4-5	Can connect a printer which does not support the ESC = command.
Only SERIAL	2-3	5-6	No printer is connected.

2-2-2-1 Data flow then the BCD-1000 is connected with the pass through.

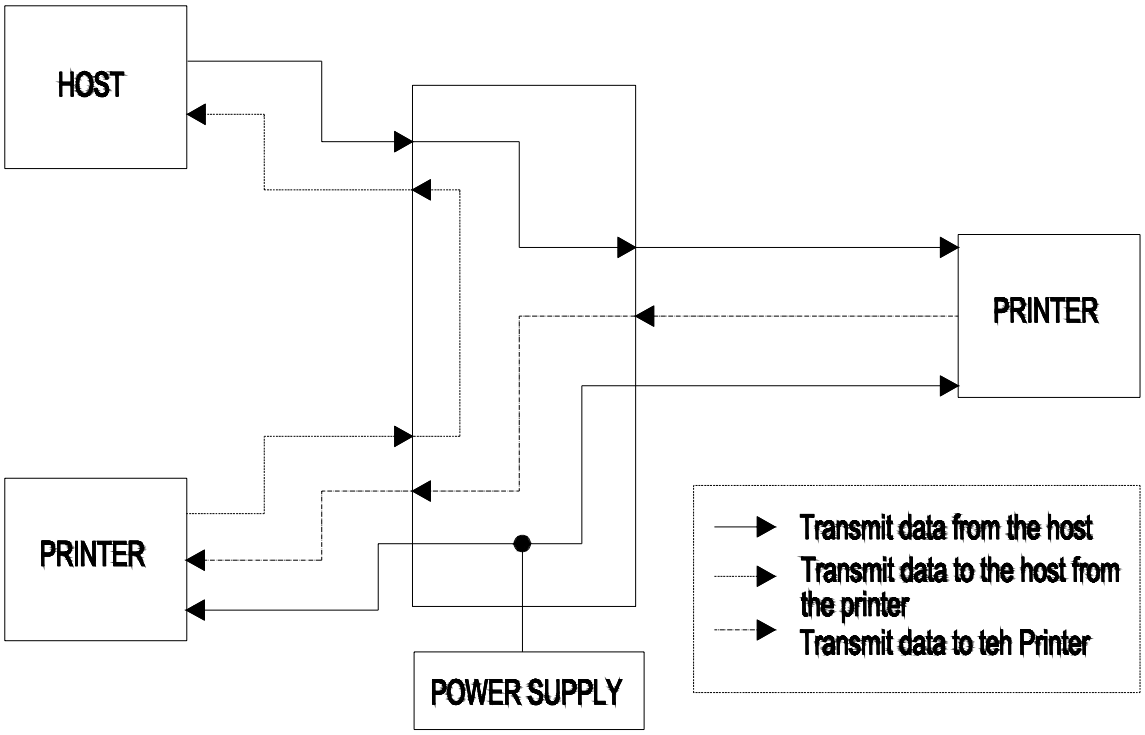

1) With the pass through connection, the BCD-1000 stores the transmitted data from the host in the receive buffer of the BCD-1000 and processes the data. In this case, the BCD-1000 transmits only the data for the printer to the printer that is connected. On the other hand, the transmitted data from the printer is transmitted directly to the host, not through the mediation of the BCD-1000.

2) The transmitted data from the host to the BCD-1000 is identified whether it is data for the customer display or the data for the printer with the ESC = command.

3) The data communication condition of the BCD-1000 with the DIP switch such as the baud rate, the data length, the parity must be same as the host and the printer.

2-2-2-2 Data flow then the BCD-1000 is connected with the Stand-alone.

The stand-alone connection is required to connect the BCD-1000 without the printer. In this case, the printer will be connected to another port than the one for the BCD-1000. the data flow when the BCD-1000 is connected as a stand-alone.

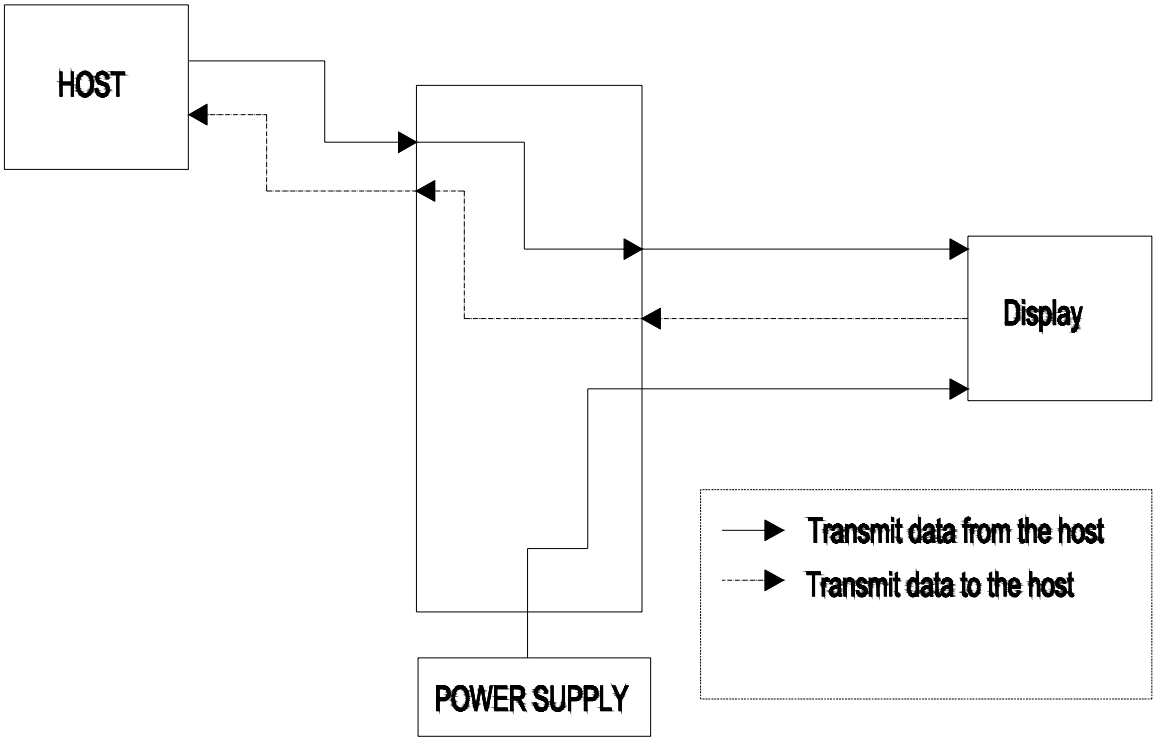

1) **With the stand-alone connection, the data from the host is transmitted to the BCD-1000, and the data from the BCD-1000 is transmitted to the host. Therefore, the status data of the BCD-1000 can be transmitted to the host.**

2) **The stand-alone connection is effective only when the customer display is selected with ESC = 2 and either of the user setting commands.**

2-2-3 Interface Specifications

2-2-3-1 Host interface connector (PC->DISPLAY)

The option stand provides the host interface connector (D-SUB 25 pin Female type).

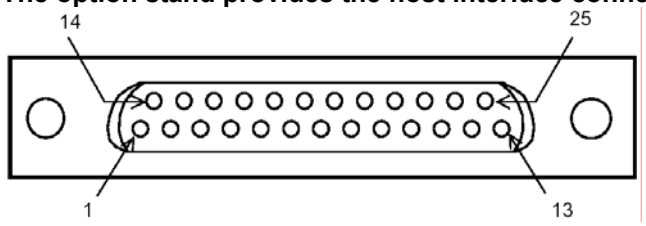

Host interface connector signal assignments

Pin Number	Signal Name	Signal Direction	Function
1	FG	-	Frame ground
2	TXD	Output	1) When the BDC-1000 is connected when a pass through connection : Transmit data to the host from the printer 2) When the BDC-1000 is connected as a stand-alone : Transmit data to the host from the DM
3	RXD	Input	Receive data from the host (host → DM)
4(*1)	RTS	Output	Same as DTR
6(*2)	DSR	Input	Indicates whether the host is ready to receive data. [SPACE] The host is ready to receive data. [MARK] The host is not ready to receive data.
7	GND	-	Signal ground
20(*1)	DTR	Output	This indicates whether the display is ready to receive data. [SPACE] The display can receive data. [MARK] The display cannot receive data. [DTR MARK] DTR goes to MARK under the following conditions : ① The period from when the power is turned on to when the display first becomes ready to receive data. ② When the self-test is executed. ③ when the remaining space in the receive buffer becomes 40bytes or less (buffer-full state). ④ When [DSR MARK] is on, if the printer is selected by a peripheral device command. [DTR SPACE] DTR goes to SPACE under the following conditions : ① When the display first becomes ready to receive data after power-on. ② When the self-test has ended. ③ when the remaining space in the receive buffer becomes 50bytes or more after it became 40bytes or less once.
25	RESET	Input	Reset signal to the printer (host → printer)

NOTES

(*1) Make sure to use either one of the RTS or the DTR terminal. Otherwise, the built-in RS-232 driver IC may be broken.

2-2-3-2 Printer interface connector (DISPLAY->PRT)

The option stand provides the printer interface connector (D-SUB 9 pin Male type).

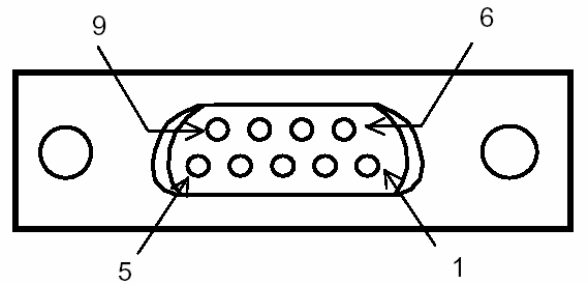

Printer interface connector signal assignments

Pin Number	Signal Name	Signal Direction	Function
2	RXD	Input	Receive data from the printer (printer → host)
3	TXD	Output	Transmit data to the printer (DM → Printer)
4	DTR	Output	Indicates whether the host is ready to receive data. [SPACE] The host is ready to receive data. [MARK] The host is not ready to receive data.
5	GND	-	Signal
6	DSR	Input	This indicates whether the display is ready to receive data from the printer. [SPACE] The printer can receive data. When the printer becomes ready to receive data the SPACE is output. [MARK] The printer cannot receive data. Even if the printer becomes ready to receive data, the MARK is not output.
9	RESET	Output	Reset signal to the printer (host → printer)

2-3 USB type

2-3-1 Connector

The Stand is equipped with an interface board, which has connectors for the display panel, printer, power supply, and host computer.

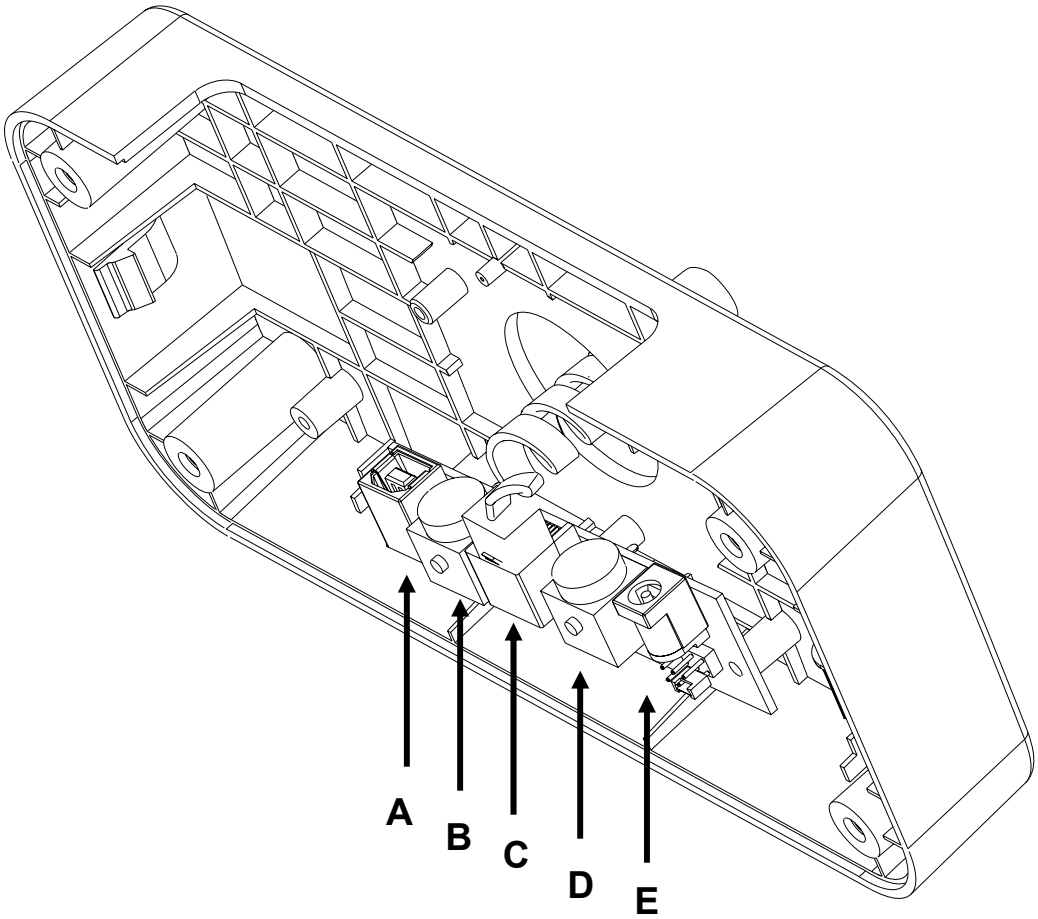

A: Host interface connector(USB)
B: Power Supply Connector (OUT DC24V)
C: Display Unit Connector
D: Power Supply Connector (IN DC24V, 3Pin)
E: Power Supply Connector (IN DC 5~24V, 2Pin)

2-3-2 SMPS Output Connector(B,D)

Pin Number	Signal Name
1	+24 VDC
2	GND
3	N.C
Shield	Frame GND

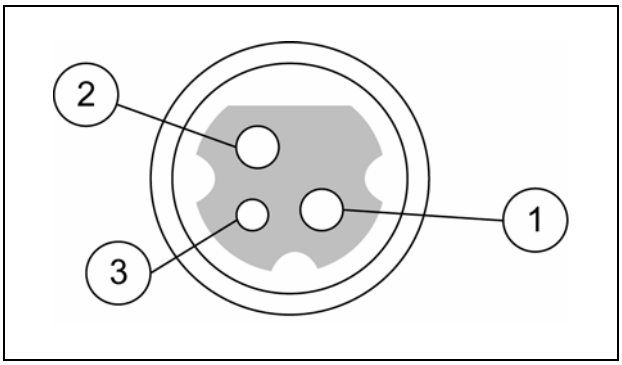

DC Power Jack(E)

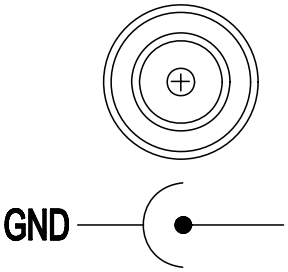

MAX 300 ~ 1350mA. +5VDC ~ +24VDC.

2-3-3 USB Interface

BCD-1000 support the USB (Universal Serial Bus) Serial Communication.

Specification

Item	Description	Remark
Transfer Type	• BULK	
Data Signal	• Bi-direction, Half-Duplex • Differential Signal Pair (D+ / D-)	
Data Format	• NRZI Format • Zero Bit Stuffing after 6 ones	
Transceiver	• Differential Receive Sensitivity : 200[mV] • Differential common Mode Range : 0.8 ~ 2.5[V] • Single-End Receiver Threshold : 0.8 ~ 2.0[V]	
Speed	• 12 Mbps	
Power	• Self-Powered	
Cable & Connector	• Cable : 5m / 2m • Connector : B Type	
Other	• Support USB SPEC V1.1	

2-3-4 Signal Description(A)

Pin No.	Signal Name	Assignment(Color)	Function
Shell	Shield	Drain Wire	Frame Ground
1	VBUS	Red	Host Power : DC5[V] / 500[mA]
2	D-	White	Differential Data Line
3	D+	Green	Differential Data Line
4	GND	Black	Signal Ground

Table 2-18 USB Pin Description

2-3-5 USB I/F Cable

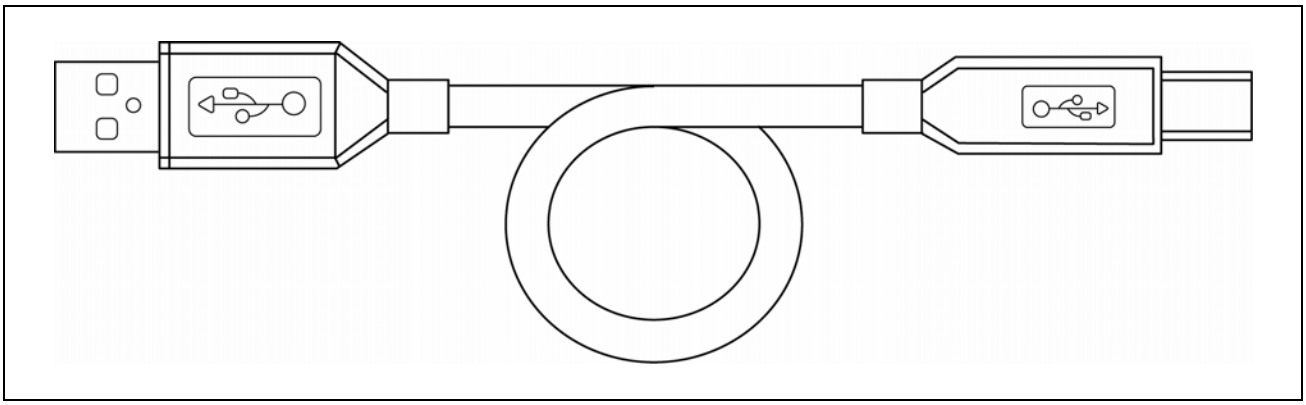

3. Switches

3-1 Power supply switch

1) Feature : A power supply switch is located on the bottom of the display panel.
2) Function : Turns the power supply on/off.

3-2 DIP switches

1) Feature : Two DIP switches are located on the back of the display panel.
2) Functions : The DIP switch settings are read only when the power is turned on.
Therefore, changing the settings while the power is on has no effect.

3-2-1 DIP S/W #1 Function (RS-232 Serial Input Setting)

S/W No.	Function	Switch OFF	Switch ON
1	Default Setting	DIP Switch Values	EEP-ROM Data Leading
2	N.C (No Connection)	Reserved for Future Using	Reserved for Future Using
3	Display Viewing Side	Customer Side	Operator Side
4	Self-test Execution	Does not execute	Executes
5~8	Command Emulation		

5	6	7	8	Command Emulation	5	6	7	8	Command Emulation
0	0	0	0	Samsung VFD	1	0	0	0	NCR Real POS
0	0	0	1	Epson ESC/POS	1	0	0	1	PD6000
0	0	1	0	ADM787/788	1	0	1	0	ICD2002
0	0	1	1	DSP800	1	0	1	1	Reserved
0	1	0	0	AEDEX	1	1	0	0	Reserved
0	1	0	1	UTC Standard	1	1	0	1	Reserved
0	1	1	0	UTC Enhance	1	1	1	0	Reserved
0	1	1	1	CD5220	1	1	1	1	Reserved

(“0” : S/W OFF, “1” : S/W ON)

3-2-2 DIP S/W #2 Function (Command Emulation Mode and Self Test Setting)

S/W No.	Function	Switch OFF	Switch ON
1	Data Length	8 bits	7 bits
2	Parity using	Non parity	Parity
3	Parity Selection	Odd	Even
4~6	Baud-rate Selection		

4	5	6	Baud-rate	4	5	6	Baud-rate
0	0	0	9,600 bps	1	0	0	115,200 bps
0	0	0	4,800 bps	1	0	1	57,600 bps
0	1	1	2,400 bps	1	1	0	38,400 bps
0	1	0	1,200 bps	1	1	1	19,200 bps

(“0” : S/W OFF, “1” : S/W ON)

7~8	N.C (No Connection)	Reserved for Future Using	Reserved for Future Using

3-3 Memory Switch

The following settings other than the DIP switch can be changed by software. These settings become effective after the power is turned on or initialization is executed by a command.

Memory S/W	Function	Default	Content to be set	Range to be set
Msw 10	Character code table section	n=0	Page 0 is selected	0-5, 16-19, 254, 255
Msw 11	International character set selection	n=0	U.S.A is selected	0-13
Msw 12	Brightness adjustment	n=4	100%	1-4
Msw 13	Selection of the peripheral devices	n=2	Display is selected	1-3
Msw 14	Cursor display	Selected	Selected	0, 1, 48, 49
Msw 15	Display No.	0	0	0-255

NOTE
Refer to US (E <Function 03> in section 5.4 Command Details for details.

4. System Command Details

Following system commands start with <STX> and ends with <ETX>, can be valid regardless of the emulation mode (display control command type).
When the system power is turned on, default set-up values are determined by DIP switched if J1 switch is set to OFF. In case of J1 ON, all setup values witch were stored into the non-volatile memory (EEP-ROM) can be reinstalled.

4-1 Set Communication Option

ASCII Format	<STX> <ENQ> P n <ETX>
Dec. Format	2, 5, 80, n, 3 (49 ≤ n ≤ 54, default n=49 : non parity, 8-bit word length, 1 stop bit)
Hex. Format	[02h] [05h] [50h] n [03h] (31h ≤ n ≤ 36h, default n=31h / Non-parity, 8-bit length, 1-stop bit)
Description	Change the display communication parity. Set 7 or 8 data bits and the parity set for even, odd or non-parity.

n	Parity	n	Parity	n	Parity
31h	N-8-1	33h	E-8-1	35h	O-8-1
32h	N-7-1	34h	E-7-1	36h	O-7-1

4-2 Set Baud-rate

ASCII Format	<STX> <ENQ> B n <ETX>
Dec. Format	2, 5, 66, n, 3 (48 ≤ n ≤ 55, default n=48 : 9,600 bps)
Hex. Format	[02h] [05h] [42h] n [03h] (30h ≤ n ≤ 37h, default n=30h / 9,600 bps)
Description	Change the display communication baud-rate. The baud-rate setting can be selected from 300 to 38,400 bps.

n	Baud-rate	n	Baud-rate	n	Baud-rate
30h	9,600 bps	32h	2,400 bps	36h	38,400 bps
31h	4,800 bps	33h	1,200 bps	37h	19,200 bps

4-3 Select Command Emulation Mode

ASCII Format	<STX> <ENQ> C n <ETX>
Dec. Format	2, 5, 67, n, 3 (48 ≤ n ≤ 63, default n=30 : BIXOLON standard mode)
Hex. Format	[02h] [05h] [43h] n [03h] (30h ≤ n ≤ 3Fh, default n=30h / BIXOLON standard mode)
Description	This command will change the emulation mode and initialize the display. The setting value will be saved into EEP-ROM, and reloaded when the power will be turned on again.

n	Command mode	n	Command mode	n	Command mode	n	Command mode
30h	BIXOLON	34h	AEDEX	38h	NCR RealPOS	3Ch	Reserved
31h	Epson EXC/POS	35h	UTC Standard	39h	PD6000	3Dh	Reserved
32h	ADM787/788	36h	UTC Enhance	3Ah	ICD2002	3Eh	Reserved
33h	DSP800	37h	CD5220	3Bh	Reserved	3Fh	Reserved

4-4 Save Display Demo Data to EEP-ROM

ASCII Format	<STX> <ENQ> L n dl...dm <ETX>
Dec. Format	2, 5, 76, n, d1...dm, 3 (n=49 or 50, d1...dm : massage data, maximum character is under 200)
Hex. Format	[02h] [05h] [4Ch] n d1...dm [03h] (n=31h or 32h)
Description	Save demo message for upper line and bottom line to EEP-ROM. n=31h : save data message for upper line. n=32h : save data message for lower line.

4-5 Run Demo Message

ASCII Format	<STX> <ENQ> D <MD8> <ETX>
Dec. Format	2, 5, 68, 8, 3
Hex. Format	[02h] [05h] [44h] [08h] [03h]
Description	Run the demo messages witch were saved by <STX> <ENQ> L command for the display.

4-6 Reset EEP-ROM

ASCII Format	<STX> <ENQ> <MD7> n <ETX>
Dec. Format	2, 5, 7, n, 3 (49 ≤ n ≤ 51)
Hex. Format	[02h] [05h] [07h] n [03h] (31h ≤ n ≤ 33h)
Description	This command will reset the content of EEP-ROM. n=31h, clear all EEP-ROM contents including default setting value. n=32h, clear upper line data message. n=33h, clear lower line data message.

4-7 Set International Code Set

ASCII Format	<STX> <ENQ> S n <ETX>
Dec. Format	2, 5, 83, n, 3 (n : refer to below Table, default n=0 : U.S.A)
Hex. Format	[02h] [05h] [53h] n [03h] (default n=00h : U.S.A)
Description	Change the display international character font. This module has 16 kinds of international code set. The setting value is saved into EEP-ROM, and the EEP-ROM value will be reloaded when the power will be turned on again.

* Setting Value to select International code set

Country	Value of 'n' to select International code set		
	ASSCII Format	Dec. Format	Hex. Format
U.S.A	(NUL) '0' 'A' 'L' or 'R'	0, 48, 65, 76, or 82	00h, 30h, 41h, 4Ch or 52h
France	(MD1) '1' or 'F'	1, 49 or 70	01h, 31h or 46h
Germany	(MD2) '2' or 'G'	2, 50 or 71	02h, 32h or 47h
U.K	(MD3) '3' or 'U'	3, 51 or 85	03h, 33h or 55h
Denmark-1	(MD4) '4' or 'D'	4, 52 or 68	04h, 34h or 44h
Sweden	(MD5) '5' or 'W'	5, 53 or 87	05h, 35h or 57h
Italy	(MD6) '6' or 'I'	6, 54 or 73	06h, 36h or 49h
Spain-1	(MD7) '7' or 'S'	7, 55 or 83	07h, 37h or 53h
Japan	(MD8) '8' or 'J'	8, 56 or 74	08h, 38h or 4Ah
Norway	(HT) '9' or 'N'	9, 57 or 78	09h, 39h or 4Eh
Denmark-2	(LF) ':' or 'E'	10, 58 or 69	0Ah, 3Ah or 45h
Spain-2	(VT) ';' or 'P'	11, 59 or 80	0Bh, 3Bh or 50h
Latin America	(FF) '<' or 'T'	12, 60 or 84	0Ch, 3Ch or 54h
Korea	(CR) '=' or 'K'	13, 61 or 75	0Dh, 3Dh or 4Bh
Slovenia Croatia	(SLE1) '>' or 'V'	14, 62 or 86	0Eh, 3Eh or 56h
China	(SLE2) '?' or 'C'	15, 63 or 67	0Fh, 3Fh or 43h

4-8 Store or Recall Title Data to/from EEP-ROM

ASCII Format	<STX> <ENQ> T n <ETX>
Dec. Format	2, 5, 84, n, 3 (n=1 or 2)
Hex. Format	[02h] [05h] [54h] n [03h] (n=01h or 02h)
Description	This command will store the contents of RAM into EEP-ROM including user-defined characters. n=01h, store all the RAM contents to EEP-ROM including user-defined characters. n=02h, recall all the data from EEP-ROM.

4-9 Show Information

ASCII Format	<STX> <ENQ> V n <ETX>
Dec. Format	2, 5, 86, n, 3 (1 ≤ n ≤ 5)
Hex. Format	[02h] [05h] [56h] n [03h] (01h ≤ n ≤ 05h)
Description	This command will show display information. n=01h, show the controller's firmware. n=02h, show communication option (parity, data length and baud-rate). n=03h, show command mode. n=04h, show international code set and Character font table. n=05h, show all above information (same as self test function).

4-10 Set Character Code Table

ASCII Format	<STX> <ENQ> F n <ETX>
Dec. Format	2, 5, 70, n, 3 (n : refer to bellow Table, default n=0 : PC-437)
Hex. Format	[02h] [05h] [46h] n [03h] (n : refer to below Table value and it's corresponding code set)
Description	Change the display Character font table. A user can change the character data which are correspond to high level of MSB (data code area = 80h~FFh). A total of 16 different Character font tables can be selected by n value. The setting function will be saved to EEP-ROM.

* Setting Value to select Character Font Table

Character Font Table		Value of 'n' to select Character Font Table		
Symbol	Description	ASCII Format	Dec. Format	Hex. Format
PC-437	Standard European	(NUL), '0' or 'A'	0, 48 or 65	00h, 30h or 41h
JIS	Japanese Katakana	(MD1), '1' or 'J'	1, 49 or 74	01h, 31h or 4Ah
PC-850	Multilingual	(MD2), '2' or 'M'	2, 50 or 77	02h, 32h or 4Dh
PC860	Portuguese	(MD3), '3' or 'P'	3, 51 or 80	03h, 33h or 50h
PC-863	Canadian French	(MD4), '4' or 'F'	4, 52 or 70	04h, 34h or 46h
PC-865	Nordic	(MD5), '5' or 'N'	5, 53 or 78	05h, 35h or 4Eh
PC737	Greek	(GS), '6' or 'K'	29, 54 or 75	1Dh, 36h or 4Bh
WPC-1250	Central European Windows Code	(SLE1), '7' or 'C'	14, 55 or 67	0Eh, 37h or 43h
WPC-1251	Cyrillic Windows Code	(SLE2), '8' or 'Y'	15, 56 or 89	0Fh, 38h or 59h
WPC-1252	Western European Windows Code	(DLE), '9' or 'W'	16, 57 or 82	10h, 39h or 52h
PC-866	Cyrillic-2 (Russian)	(DC1), ':' or 'R'	17, 58 or 89	11h, 3Ah or 59h
PC-852	Latin-2 (Slavonic)	(DC2), ';' or 'L'	18, 59 or 76	12h, 3Bh or 4Ch
PC-858	Euro	(DC3), '<' or 'E'	19, 60 or 69	13h, 3Ch or 45h
PC775	Baltic	(FS), '=' or 'B'	28, 61 or 66	1Ch, 3Dh or 42h
WPC-1253	Creek Windows Code	(SF1), '>' or 'G'	30, 62 or 71	1Eh, 3Eh or 47h
WPC-1254	Turkish Windows Code	(SF2), '?' or 'T'	31, 63 or 84	1Fh, 3Fh or 54h
PC864	Arabic	(ESC), '!' or 'I'	27, 33 or 73	1Bh, 21h or 49h

5. Control Command List

There are two ways to choose command emulation mode.
1) Use <STX> <ENQ> C n <ETX> command.
2) Recall from EEP-ROM by <STX> <ENQ> T n <ETX>, n=02h.

5-1 BIXOLON's Standard Command List

ASCII Command			Function
<BS>	<ESC> [D	<NUL> K	Move cursor left (back space)
<HT>	<ESC> [C	<NUL> M	Move cursor right (horizontal tab)
<LF>	<ESC> [B	<NUL> P	Move cursor down (line feed)
<US><LF>	<ESC> [A	<NUL> H	Move cursor up
<HOM>	<ESC> [H		Move cursor to home position
<CR>	<ESC> [L	<NUL> G	Move cursor to left-most position
<US><CR>	<ESC> [R	<NUL> O	Move cursor to right-most position
<US> B	<ESC> [K		Move cursor to bottom position
<US> $ x y	<ESC> 1 x y	<ESC> P x y	Move cursor to specified position
<CLR>			Clear display screen, and clear string mode
<CAN>			Clear cursor line, and clear string mode
<ESC> @			Initialize display
<ESC> = n			Select peripheral device(s)
<ESC> % n			Select/Cancel user-defined characters
<ESC> & s n m a			Define user-defined characters
<ESC> ? n			Delete user-defined characters
<ESC> s <MD1>			Store user-defined characters into EEP-ROM
<ESC> d <MD1>			Reload user-defined characters from EEP-ROM
<ESC> R n	<ESC> f n		Select an international code set
<ESC> t n	<ESC> c n		Select a character font table
<ESC> W n m			Select/Cancel window range
<US><MD1>	<ESC><DC1>		Overwrite mode
<US><MD2>	<ESC><DC2>		Vertical scroll mode
<US><MD3>	<ESC><DC3>		Horizontal scroll mode
<US> E n			Set display screen blink interval
<US> T h m			Set and display counter (set time)
<US> U			Display counter (display time)
<US> X n	<ESC> * n		Brightness adjustment (dimming control)
<US> r n			Turn reversed character mode on/off
<US> v n			Status confirmation by DTR signal
<US> @			Execute self-test
<US> :			Start/End macro definition
<US> ^ n m			Execute and quit defined macro
<US> . n			Display period
<US> , n			Display comma
<US> ; n			Display period and comma
<US> # n m			Turn annunciator on/off
<US> C n	<ESC> _ n		Set cursor on/off
<US><DC1> n			Set line blinking
<US><DC2> n			Clear line blinking
<ESC> Q A	<ESC> F A		Write string character to upper line
<ESC> Q B	<ESC> F B		Write string character to lower line
<ESC> Q D	<ESC> F D		Upper line message scroll continuously
<ESC> Q O	<ESC> F O		Lower line message scroll continuously

5-2 EPSON ESC/POS Emulation Mode

ASCII Command	Function
<BS>	Move cursor left (back space)
<HT>	Move cursor right (horizontal tab)
<LF>	Move cursor down (line feed)
<US><LF>	Move cursor up
<HOM>	Move cursor to home position
<CR>	Move cursor to left-most position
<US><CR>	Move cursor to right-most position
<US> B	Move cursor to bottom position
<US> $ x y	Move cursor to specified position
<CLR>	Clear display screen, and clear string mode
<CAN>	Clear cursor line, and clear string mode
<ESC> @	Initialize display
<ESC> = n	Select peripheral device(s)
<ESC> % n	Select/Cancel user-defined characters
<ESC> & s n m a (p1...pa) * (m-n+1)	Define user-defined characters
<ESC> ? n	Delete user-defined characters
<ESC> s <MD1>	Store user-defined characters into EEP-ROM
<ESC> d <MD1>	Reload user-defined characters from EEP-ROM
<ESC> R n	Select an international code set
<ESC> t n	Select a character font table
<ESC> W n m x1 y1 x2 y2	Select/Cancel window range
<US><MD1>	Overwrite mode
<US><MD2>	Vertical scroll mode
<US><MD3>	Horizontal scroll mode
<US> E n	Set display screen blink interval
<US> T h m	Set and display counter (set time)
<US> U	Display counter (display time)
<US> X n	Brightness adjustment (dimming control)
<US> r n	Turn reversed character mode on/off
<US> v n	Status confirmation by DTR signal
<US> @	Execute self-test
<US> :	Start/End macro definition
<US> ^ n m	Execute and quit defined macro
<US> . n	Display period
<US> , n	Display comma
<US> ; n	Display period and comma
<US> # n m	Turn annunciator on/off
<US> C n	Set cursor on/off
<US><DC1> n	Set line blinking
<US><DC2> n	Clear line blinking

5-3 ADM787/788 Emulation Mode

ASCII Command	Hex. Code	Function
<CLR>	0Ch	Clear display
<CR>	0Dh	Carriage return
<SLE1>	0Eh	Clear upper line and move cursor to upper left-end position
<SLE2>	0Fh	Clear bottom line and move cursor to bottom left-end position
<DC0> n	10h n	Set period to upper line, last n position (31h ≤ n ≤ 44h)
<DC1> n	11h n	Set line blinking (n=1 : upper line, n=2 : bottom line)
<DC2> n	12h n	Clear line blinking (n=1 : upper line, n=2 : bottom line)
<SF1>	1Eh	Clear field 1 and move cursor to field 1, first position
<SF2>	1Fh	Clear field 2 and move cursor to field 2, first position

5-4 DSP-800 (Giga Tech) Emulation Mode

ASCII Command	Hex. Code	Function
<EOT><SOH> I n <ETB>	04h 01h 49h n 17h	Select international code set (30h ≤ n ≤ 3Fh)
<EOT><SOH> P n <ETB>	04h 01h 50h n 17h	Move cursor to specified position (31h ≤ n ≤ 58h, n=31h : home position, n=58h : right-end of lower line)
<EOT><SOH> C n m <ETB>	04h 01h 43h n m 17h	Clear display range from n position to m position and move cursor to n position (31h ≤ n ≤ m ≤ 58h)
<EOT><SOH> S n <ETB>	04h 01h 53h n 17h	Save current display data to n'th layer for demo view data (01h ≤ n ≤ 03h or 31h ≤ n ≤ 33h)
<EOT><SOH> D n m <ETB>	04h 01h 44h n 17h	Display the saved demo message (01h ≤ n ≤ 03h or 31h ≤ n ≤ 33h)
<EOT><SOH> A n <ETB>	04h 01h 41h n 17h	Brightness adjustment (01h ≤ n ≤ 04h or 31h ≤ n ≤ 34h, 01h & 31h : lowest, 04h & 34h : 100%)
<EOT><SOH> F n <ETB>	04h 01h 46h n 17h	Blink display screen (00h ≤ n ≤ FFh)
<EOT><SOH> & n p1...p5 <ETB>	04h 01h 26h n p1...p5 17h	Define download characters (20h ≤ n)
<EOT><SOH> ? n <ETB>	04h 01h 3Fh n 17h	Delete download characters (20h ≤ n)
<EOT><SOH> = n <ETB>	04h 01h 3Dh n 17h	Select peripheral device (n=1 : printer, n=2 : display)
<EOT><SOH> % <ETB>	04h 01h 25h 17h	Initialize display
<EOT><SOH> @ <ETB>	04h 01h 40h 17h	Execute self-test
<EOT><SOH> B n N <ETB>	04h 01h 42h n 4Eh 17h	Set baud-rate and parity (31h ≤ n ≤ 36h)

5-5 AEDEX Emulation Mode

ASCII Command	Hex. Code	Function
! # 1 d1 d2...dn <CR>	21h 23h 31h d1 d2...dn 0Dh	Upper line display (1 ≤ n ≤ 20, 20h ≤ dn ≤ FFh) -. Clear upper line : ! # 1 <CR>
! # 2 d1 d2...dn <CR>	21h 23h 32h d1 d2...dn 0Dh	Bottom line display (1 ≤ n ≤ 20, 20h ≤ dn ≤ FFh) -. Clear bottom line : ! # 2 <CR>
! # 4 d1 d2...dn <CR>	21h 23h 34h d1 d2...dn 0Dh	Upper line message scroll continuously (1 ≤ n ≤ 40)
! # 5 hh:mm <CR>	21h 23h 35h hh:mm 0Dh	Display time (h,m=0~9) -. Display previously set time : ! # 5 <CR>
! # 6 d1 d2...dn <CR>	21h 23h 36h d1 d2...dn 0Dh	Upper line message scroll one time (1 ≤ n ≤ 40)
! # 8 n m <CR>	21h 23h 38h n m 0Dh	Change attention code (20h ≤ n,m)
! # 9 d1 d2...dn <CR>	21h 23h 39h d1 d2...dn 0Dh	Two line display (1 ≤ n ≤ 40) -. Clear display : ! # 9 <CR>

5-6 UTC Standard Emulation Mode

ASCII Command	Hex. Code	Function
<EOT> n	04h n	Display dimming (n=20h : 20%, 40h : 40%, 60h : 60%, FFh : 100%)
<BS>	08h	Back space
<HT>	09h	Horizontal tab
<LF>	0Ah	Line feed
<CR>	0Dh	Carriage return
<DLE> n	10h n	Display position (00h ≤ n ≤ 27h, n=00h : home position, 27h : right end of lower line)
<DC1>	11h	Overwrite display mode
<DC2>	12h	Vertical scroll mode
<DC3>	13h	Cursor on
<DC4>	14h	Cursor off
<CAN>	18h	Clear to end of line
<EM>	19h	Clear to end of display
<SUB> n	1Ah n	Select international code set (30h ≤ n ≤ 3Fh)
<ESC> d	1Bh 64h	Change to UTC enhanced mode
<FS>	1Ch	Flashing text start
<GS>	1Dh	Flashing text stop
<RS>	1Eh	Clear display and cursor home
<US>	1Fh	Reset

5-7 UTC Standard Emulation Mode

ASCII Command	Hex. Code	Function
<SI>	0Fh	Flashing text start
<SO>	0Eh	Flashing text stop
<ESC> u A d1 d2...dn <CR>	1Bh 75h 41h d1 d2...dn 0Dh	Upper line display (1 ≤ n ≤ 20, 20h ≤ dn ≤ FFh) -. Clear upper line : <ESC> u A <CR>
<ESC> u B d1 d2...dn <CR>	1Bh 75h 42h d1 d2...dn 0Dh	Bottom line display (1 ≤ n ≤ 20, 20h ≤ dn ≤ FFh) -. Clear bottom line : <ESC> u B <CR>
<ESC> u D d1 d2...dn <CR>	1Bh 75h 44h d1 d2...dn 0Dh	Upper line message scroll continuously (1 ≤ n ≤ 40)
<ESC> u E hh:mm <CR>	1Bh 75h 45h hh:mm 0Dh	Display time (hh, mm = 0~9) -. Display previously set time : <ESC> u E <CR>
<ESC> u F d1 d2...dn <CR>	1Bh 75h 46h d1 d2...dn 0Dh	Upper line message scroll one time (1 ≤ n ≤ 40)
<ESC> u G <CR>	1Bh 75h 47h 0Dh	Display menu buttons until next power up
<ESC> u H d1 d2...d7 <CR>	1Bh 75h 48h d1 d2...d7 0Dh	Difine user-defined character -. s : character code (20h ≤ n ≤ FFh) -. d1~d7 : font data (00h ≤ d1~d7 ≤ FFh) -. Example : Euro "€" currency symbol design

b7	b6	b5	b4	b3	b2	b1	b0	Font data
*	*	*	0	0	1	1	0	d1 = 06h
*	*	*	0	1	0	0	1	d2 = 09h
*	*	*	1	1	1	0	0	d3 = 1Ch
*	*	*	0	1	0	0	0	d4 = 08h
*	*	*	1	1	1	0	0	d5 = 1Ch
*	*	*	0	1	0	0	1	d6 = 09h
*	*	*	0	0	1	1	0	d7 = 06h

* : Don't care

<ESC> u I d1 d2...dn <CR>	1Bh 75h 49h d1 d2...dn 0Dh	Two line display (1 ≤ n ≤ 40) -. Clear display : <ESC> u I <CR>
<ESC> u 1 n <CR>	1Bh 75h 6Ch n 0Dh	Select international code set (30h ≤ n ≤ 3Fh)
<ESC><RS><CR>	1Bh 0Fh 0Dh	Change to UTC standard mode

5-8 CD-5220 (Partner Tech) Emulation Mode

ASCII Command	Function
<BS> or <ESC> [D	Move cursor left (back space)
<HT> or <ESC> [C	Move cursor right (horizontal tab)
<LF> or <ESC> [B	Move cursor down (line feed)
<ESC> [A	Move cursor up
<HOM> or <ESC> [H	Move cursor to home position
<CR> or <ESC> [L	Move cursor to left-most position
<ESC> [R	Move cursor to right-most position
<ESC> [K	Move cursor to bottom position
<ESC> 1 x y	Move cursor to specified position
<CLR>	Clear display screen, and clear string mode
<CAN>	Clear cursor line, and clear string mode
<ESC> @	Initialize display
<ESC> = n	Select peripheral device(s)
<ESC> % n	Select/Cancel user-defined characters
<ESC> & s n m a (p1...pa) * (m-n+1)	Define user-defined characters
<ESC> ? n	Delete user-defined characters
<ESC> s <MD1>	Store user-defined characters into EEP-ROM
<ESC> d <MD1>	Reload user-defined characters from EEP-ROM
<ESC> f n	Select an international code set
<ESC> c n	Select a character font table
<ESC> W s x1 x2 y	Reset window range at horizontal scroll mode (*Note-1)
<ESC><DC1>	Overwrite mode
<ESC><DC2>	Vertical scroll mode
<ESC><DC3>	Horizontal scroll mode
<ESC> * n	Brightness adjustment
<ESC> _ n	Set cursor on/off
<ESC> Q A d1 d2... dn <CR>	Set the string display mode, write string to upper line (**NOTE-2)
<ESC> Q B d1 d2... dn <CR>	Set the string display mode, write string to lower line (**NOTE-2)
<ESC> Q D d1 d2... dn <CR>	Upper line message scroll continuously (***NOTE-3)

[* NOTE-1] Detailed description of "<ESC> W s x1 x2 y" command

ASCII Format	<ESC> W s x1 x2 y
Dec. Format	27, 87, n, x1, x2, y (n=0 or 1, 1 ≤ x1 ≤ x2 ≤ 20, y=1 or 2)
Hex. Format	[1Bh] [57h] n x1 x2 y (n=00h or 01h, 01h ≤ x1 ≤ x2 ≤ 14h, y=01h or 02h)
Description	Selects or cancels a single window on the display screen. * n specifies selection or cancellation. When n=0, a window is canceled. (Values x1, x2, and y are not required.) When n=1, a window is selected. (Values x1, x2, and y are required.) The x1 and x2 set the position of the left column and right column, respectively, of the window. The y sets the upper line or the lower line of the window. This function is valid within the horizontal mode.

[** NOTE-2]
While using command "<ESC> Q A" or "<ESC> Q B", these two commands can be used with terminal printer : And another commands can not be used except when using command "CLR" or "CAN" to change operating mode.
[***NOTE-3]
When using command "<ESC> Q D", the upper line message will scroll continuously until a new command is received, it will then clear the upper line and move the cursor to the upper left-end position.

5-9 NCR RealPOS Emulation Mode

ASCII Command	Function
<NUL> K or <BS>	Move cursor left (back space)
<NUL> M or <HT>	Move cursor right (horizontal tab)
<NUL> P or <LF>	Move cursor down (line feed)
<NUL> H	Move cursor up
<HOM>	Move cursor to home position
<NUL> G or <CR>	Move cursor to left-most position
<NUL> O	Move cursor to right-most position
<ESC> P x y	Move cursor to specified position
<CLR>	Clear display screen, and clear string mode
<CAN>	Clear cursor line, and clear string mode
<ESC> @	Initialize display
<ESC><DC1>	Overwrite mode
<ESC><DC2>	Vertical scroll mode
<ESC><DC3>	Horizontal scroll mode
<US> E n	Set display screen blink interval
<ESC> _ n	Set cursor on/off
<US><DC1> n	Set line blinking
<US><DC2> n	Clear line blinking
<ESC> F A d1 d2... dn <CR>	Write string character to upper line
<ESC> F B d1 d2... dn <CR>	Write string character to lower line
<ESC> F D d1 d2... dn <CR>	Upper line message scroll continuously
<ESC> F O d1 d2... dn <CR>	Lower line message scroll continuously
<US><MD1> n	Message vertical upper continuously
<US><MD2> n	Message vertical down continuously

5-10 PD6000 (Logic Controls) Emulation Mode

ASCII Command	Hex. Code	Function
<DC2>	12h	Vertical scroll mode
<DC1>	11h	Normal display mode
<EOT> n	04h n	Brightness control (n=FFh, 60h, 40h, 20h)
<BS>	08h	Back space
<HT>	09h	Horizontal tab
<LF>	0Ah	Line feed
<CR>	0Dh	Carriage return
<DLE> n	10h n	Display position (00h ≤ n ≤ 27h)
<DC3>	13h	Cursor on
<DC4>	14h	Cursor off
<US>	1Fh	Reset
<ETX> n p1...p5	03h n p1...p5	Define user font (20h ≤ n ≤ FFh, p1...p5 pattern data)
<ENQ> d1...dn <CR>	05h d1...dn 0Dh	Message scroll (up to 40 characters)
<SOH>	01h	Data to peripheral : All data following this command will be sent to the peripheral until a “Data to display” command is received.
! # <STX>	21h 23h 02h	Data to display : All data following this command will be sent to the customer display until a “Data to peripheral” command is received.

5-11 ICD-2002 (Puritron) Emulation Mode

<table>
<tr><th>ASCII Command</th><th>Hex. Code</th><th>Function</th></tr>
<tr><td><HT></td><td>09h</td><td>Move cursor right (only valid in overwrite mode)</td></tr>
<tr><td><BS></td><td>08h</td><td>Move cursor left (only valid in overwrite mode)</td></tr>
<tr><td><CR></td><td>0Dh</td><td>Move cursor to left-end position (only valid in overwrite mode)</td></tr>
<tr><td><ESC> @</td><td>1Bh 40h</td><td>Initialize customer display to initial state</td></tr>
<tr><td><ESC> U</td><td>1Bh 55h</td><td>Select upper row as current row (initial default)</td></tr>
<tr><td><ESC> D</td><td>1Bh 44h</td><td>Select lower row as current row</td></tr>
<tr><td><ESC> A n</td><td>1Bh 41h n</td><td>Sets customer display disable or enable
(n="D", 44h : disable, n="E", 45h : enable)</td></tr>
<tr><td><ESC> C r c</td><td>1Bh 43h r c</td><td>Move cursor to specified position (only valid in overwrite mode)
(r=55h : upper line, r=44h : lower line)
(1 ≤ c ≤ 20 : column number)</td></tr>
<tr><td><ESC> E r n</td><td>1Bh 45h r n</td><td>Set special effect or display mode of specified row
<table>
<tr><th>r</th><th>Select Row</th><th>n</th><th>Select Function</th></tr>
<tr><td>58h
55h
44h</td><td>all rows
upper row
lower row</td><td>30h
31h
32h
33h
34h
35h</td><td>shift mode (default display mode)
rotation mode
blink mode
clear this row and switch to shift mode
overwrite mode
vertical mode</td></tr>
</table></td></tr>
<tr><td><ESC> R n</td><td>1Bh 52h n</td><td>Set international code set sets (30h ≤ n ≤ 3Fh)</td></tr>
<tr><td><ESC> = n</td><td>1Bh 3Dh n</td><td>Select peripheral
(n=1 : printer, n=2 : display, n=3 : printer and display)</td></tr>
<tr><td><ESC> % n</td><td>1Bh 25h n</td><td>Select/cancel character user defined character
(n=0 : selected, n=1 : canceled)</td></tr>
<tr><td><ESC> & n s [pn]*5</td><td>1Bh 26h n s
data</td><td>Define user font pattern
n=code for first character
s=code for last character
data=5 bytes required for each character</td></tr>
</table>

6. Control Command Descriptions

* Defaults (Initial State at Power-On) : The contents of the initial state are shown in below table.

Setting Items	Setting Contents
Command emulation mode	BIXOLON's Customer Display Standard
Display mode	Overwrite mode
Cursor position	Home position (the upper left corner of the window)
Display screen	Clear
Window	Not defined
Character code table	PC-437 (*)
International character set	U.S.A (*)
User-defined characters	Not defined
Macro definition	Not defined
Reserved characters	Canceled
Display blinking	Canceled
Brightness adjustment	100% (*)
Peripheral device selection	Display (*)
Set-up time	00:00

(*) Set by the memory switch

6-1 Back Space (Move Cursor Left)

ASCII Format	<BS>	<ESC> [D	<NUL> K
Dec. Format	8	27, 91, 68	0, 75
Hex. Format	[08h]	[1Bh] [5Bh] [44h]	[00h] [4Bh]
Description	Moves the cursor one character position to the left. When the cursor is at the left end of a line, the operation of this command depends on the display mode, as follows : 1) Overwrite mode : When the cursor is at the left end of the lower line, it is moved to the right end of the upper line. When it is at the left end of the upper line, it is moved to the right end of the lower line. 2) Vertical scroll mode : When the cursor is at the left end of the lower line, it is moved to the right end of the upper line. When it is at the left end of the upper line, the display on the upper line is scrolled to the lower line and the upper line is cleared. At this time, the cursor moved to the right end of the upper line. 3) Horizontal scroll mode : All characters on the current line are scrolled on character to the right. The cursor is not moved, but the character area at the left end is cleared. * When a window is defined, the cursor is moved only within the current window.		

6-2 Horizontal Tab (Move Cursor Right)

ASCII Format	<HT>	<ESC> [C	<NUL> M
Dec. Format	9	27, 91, 67	0, 77
Hex. Format	[09h]	[1Bh] [5Bh] [43h]	[00h] [4Dh]
Description	Moves the cursor to the right. When the cursor is at the right end of a line, the operation of this command depends on the display mode, as follows : 1) Overwrite mode : When the cursor is at the right end of the upper line, it is moved to the left end of the lower line. When it is at the right end of the lower line, it is moved to the left end of the upper line. 2) Vertical scroll mode : When the cursor is at the right end of the upper line, it is moved to the left end of the lower line. When it is at the right end of the lower line, the display on the lower line is scrolled to the upper line and the lower line is cleared. At this time, the cursor moved to the left end of the lower line. 3) Horizontal scroll mode : All characters on the current line are scrolled on character to the left. The cursor is not moved, but the character area at the left end is cleared. * When a window is defined, the cursor is moved only within the current window.		

6-3 Move Cursor Downward (Line Feed)

ASCII Format	<LF>	<ESC> [B	<NUL> P
Dec. Format	10	27, 91, 66	0, 80
Hex. Format	[0Ah]	[1Bh] [5Bh] [42h]	[00h] [50h]
Description	Moves the cursor down one line. When the cursor is on the lower line, the operation of this command depends on the display mode, as follows : 1) Overwrite mode : The cursor is moved to the same column on the upper line. 2) Vertical scroll mode : The characters displayed on the lower line are scrolled to the upper line and the lower line is cleared. The cursor remains at the same position. 3) Horizontal scroll mode : The cursor is not moved. * When a window is defined, the cursor is moved only within the current window.		

6-4 Move Cursor Up

ASCII Format	<US><LF>	<ESC> [A	<NUL> H
Dec. Format	31, 10	27, 91, 65	0, 72
Hex. Format	[1Fh] [0Ah]	[1Bh] [5Bh] [41h]	[00h] [48h]
Description	Moves the cursor up one line. When the cursor is on the upper line, the operation of this command depends on the display mode, as follows : 1) Overwrite mode : The cursor is moved to the same column on the lower line. 2) Vertical scroll mode : The characters displayed on the upper line are scrolled to the lower line and the upper line is cleared. The cursor remains at the same position. 3) Horizontal scroll mode : The cursor is not moved. * When a window is defined, the cursor is moved only within the current window.		

6-5 Cursor Home (Move Cursor to Home Position)

ASCII Format	<HOM>	<ESC> [H	
Dec. Format	11	27, 91, 72	
Hex. Format	[0Bh]	[1Bh] [5Bh] [48h]	
Description	Moves the cursor to the left-most position on the upper line (home position). Home position indicates the fist column of the upper line. * When a window is defined, the home position is the upper left corner of the window.		

6-6 Carriage Return (Move Cursor to Left-most Position)

ASCII Format	<CR>	<ESC> [L	<NUL> G
Dec. Format	13	11, 91, 76	0, 71
Hex. Format	[0Dh]	[1Bh] [5Bh] [4Ch]	[00h] [47h]
Description	Moves the cursor to the left-most position on the current line. * The cursor is moved only within the current window.		

6-7 Move Cursor to Right-most Position

ASCII Format	<US><CR>	<ESC> [R	
Dec. Format	31, 13	11, 91, 82	
Hex. Format	[1Fh] [0Dh]	[1Bh] [5Bh] [52h]	
Description	Moves the cursor to the right-most position on the current line. * The cursor is moved only within the current window.		

6-8 Move Cursor to Bottom Position

ASCII Format	<US> B	<ESC> [K	
Dec. Format	31, 65	11, 91, 75	
Hex. Format	[1Fh] [42h]	[1Bh] [5Bh] [4Bh]	
Description	Moves the cursor to the bottom position. The bottom position indicates the 20th column of the lower line. * When a window is defined, the bottom position is the lower right corner of the window.		

6-9 Move Cursor to Specified Position

ASCII Format	<US> $ x y	<ESC> 1 x y	<ESC> P x y
Dec. Format	31, 36, x, y	31, 108, x, y	31, 80, x, y
Hex. Format	[1Fh] [24h] x y	[1Bh] [6Ch] x y	[1Bh] [50h] x y
Description	Moves the cursor to the nth column on the mth line. If a value exceeding the range is specified for x (column) and/or y (line), this command is ignored and the cursor does not move. (rage : 1 ≤ x ≤ 20, y=1 ro 2)		

6-10 Clear Display Screen and Clear String Mode

ASCII Format	<CLR>		
Dec. Format	12		
Hex. Format	[0Ch]		
Description	Clear all the displayed characters. After the command is executed, the cursor moves to the home position. * When a window is defined, the cursor is moved only within the current window.		

6-11 Clear Cursor Line and Clear String Mode

ASCII Format	<CAN>		
Dec. Format	24		
Hex. Format	[18h]		
Description	Clears the line containing the cursor. After the command is executed, the cursor moves to the left-most position on the current line. * When a window is defined, the home position is the upper left corner of the window.		

6-12 Initialize Display

ASCII Format	<ESC> @		
Dec. Format	27, 64		
Hex. Format	[1Bh] [40h]		
Description	Reset the various display settings to their initial values. The software settings are reset to their power-on values. The jumper switches are not checked again. The data in the receive buffer is not cleared. After initializing the display, the display screen is cleared and the cursor moves to the home position.		

6-13 Select Peripheral Device(s)

ASCII Format	<ESC> = n		
Dec. Format	27, 61, n		
Hex. Format	[1Bh] [3Dh] n		
Description	Select peripheral device(s). * n=01h, enable printer, disable display. * n=02h, disable printer, enable display. * n=03h, enable printer, enable display. * n=04h, display message for customer side (Display data can be accepted when J1 is opened). * n=05h, display message for operator side (Display data can be accepted when J1 is closed).		

6-14 Select/Cancel User-defined Characters

ASCII Format	<ESC> % n		
Dec. Format	27, 37, n		
Hex. Format	[1Bh] [25h] n		
Description	Selects or cancels the user-defined character set. (n=0 or 1, default n=0) When n is 1, the user-defined character set is selected. When the user-defined character set is not defined using the "<ESC> &" command, the internal character set is displayed. When n is 0, the user-defined character set is canceled. (The internal character set is selected.) In this case, this command has no effect on the user-defined characters that have already been defined using the "<ESC> &" command. This command has no effect on the characters already displayed.		

6-15 Define User-defined Characters

ASCII Format	**<ESC> & x n m [a (p1...pa)] * (m-n+1)**
Dec. Format	**27, 38, s n m [a (p1...pa)] * (m-n+1), s=1, 32 ≤ n ≤ m ≤ 255, 0 ≤ p1...pa ≤ 255**
Hex. Format	**[1Bh] [26h] s n m [a (p1...pa)] * (m-n+1), s=01h, 20h ≤ n ≤ m ≤ FFh, 00h ≤ p1...pa ≤ FFh**
Description	**Defines user-defined characters.** *** s denotes the number of bytes in the vertical direction. (s=1)** *** n specifies the beginning character code for the definition, and m specifies the final character code. When only one character is defined, use n=m.** *** 224 characters can be defined between character codes 20h (32) and FFh (255) in the character code table.** *** a denotes the number of dots in the horizontal direction. When a< 5, the remaining dots on the right side of the user-defined characters are padded with spaces.** *** p1...pa is the dot data to be defined for the characters. This indicates the dot pattern for a dot in the horizontal direction from the left side.** *** The number of data items to be defined is s * a. When 8 bits are specified for the communication word length, the most significant bit is ignored.** *** Once the user-defined characters are defined, they remain effective until they are redefined, "<ESC> @" is executed, or the power is turned off.** *** When only the user-defined characters are defined and the user-defined character set is not selected using the "<ESC> %" command, the user-defined characters are not displayed.**
Example	**To define the character "€" at character code 20h (32) :** 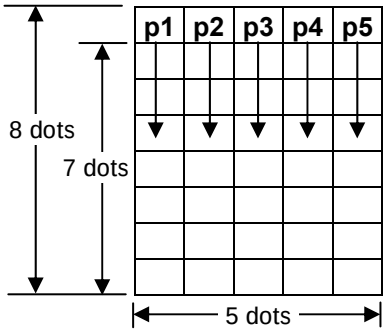 **1) When the most significant bit is processed as "0", or when the communication word length is specified as 7 bits, the defined character definition is executed as shown below :** **[1Bh] [26h] [01h] : define user-defined character** **[20h] [20h] [05h] : code from 20h to 20h, each character will be composed by 5 bytes** **[12h] [2Ah] [7Fh] [2Ah] [24h] : left side of above define example (MSB="0")** **2) When the communication word length is specified as 8 bits and the most significant bit is processed as "1", the user-defined character definition is executed as shown below :** **[1Bh] [26h] [01h] : define user-defined character** **[20h] [20h] [05h] : code from 20h to 20h, each character will be composed by 5 bytes** **[92h] [AAh] [FFh] [AAh] [A4h] : right side of above define example (MSB="1")**

	p1	p2	p3	p4	p5												
b7						MSB	0	0	0	0	0		1	1	1	1	1
b6							0	0	1	1	0		0	0	1	1	0
b5							0	1	0	0	1		0	1	0	0	1
b4							1	1	1	0	0	o	1	1	1	0	0
b3							0	1	0	0	0	r	0	1	0	0	0
b2							1	1	1	0	0		1	1	1	0	0
b1							0	1	0	0	1		0	1	0	0	1
b0						LSB	0	0	1	1	0		0	0	1	1	0

6-16 Delete User-defined Characters

ASCII Format	**<ESC> ? n**		
Dec. Format	**27, 63, n**		
Hex. Format	**[1Bh] [3Fh] n**		
Description	**Cancels user-defined characters. (20h ≤ n ≤ FFh)** **This command cancels the pattern defined for the character code specified by n. If specified code is transmitted after the pattern is canceled by this command, the internal character is displayed. If the specified character code is not defined, this command is ignored. This command has no effect on characters already displayed.**		

6-17 Store User-defined Characters into EEP-ROM

ASCII Format	<ESC> s <MD1>		
Dec. Format	27, 115, 1		
Hex. Format	[1Bh] [73h] [01h]		
Description	Current using character data, including user-defined characters, is stored into EEP-ROM.		

6-18 Restore User-defined Characters from EEP-ROM

ASCII Format	<ESC> s <MD1>		
Dec. Format	27, 100, 1		
Hex. Format	[1Bh] [64h] [01h]		
Description	Character font table is reloaded from EEP-ROM, and the user-defined characters will be selected.		

6-19 Select an International Code set

ASCII Format	<ESC> R n	<ESC> f n	
Dec. Format	27, 82, n	27, 102, n	
Hex. Format	[1Bh] [52h] n	[1Bh] [66h] n	
Description	Set international code set. After setting international code set, the user-defined characters are subject to be deleted.		

6-20 Select a Character Font Table

ASCII Format	<ESC> t n	<ESC> c n	
Dec. Format	27, 116, n	27, 99, n	
Hex. Format	[1Bh] [74h] n	[1Bh] [63h] n	
Description	Select character font table.		

6-21 Select/Cancel Window Range

ASCII Format	<ESC> W n m x1 y1 x2 y2
Dec. Format	27, 87, n, m, x1, y1, x2, y2 (1 ≤ n ≤ 4, m=0, 1, 48 or 49, 1 ≤ x1 ≤ x2 ≤ 20, 1 ≤ y1 ≤ y2 ≤ 2)
Hex. Format	[1Bh] [57h] n m x1 y1 x2 y2
Description	Selects or cancels a single window on the display screen. * n specifies the window number to be selected or canceled. (01h ≤ n ≤ 04h) * m specifies selection or cancellation. When m=1 or 49 (31h), a window is selected. (Values x1, y1, x2, and y2 are required) When m=0 or 48 (32h), a window is canceled. (Values x1, y1, x2, and y2 are not required) * x1 and y1 set the positions of the upper left column and line of the window, respectively. Up to four windows can be selected simultaneously on the display screen. However, the window ranges cannot overlap. If a value outside the display screen or overlapping another window is set, this command is ignored. To cancel a window, arguments for the window range (x1, y1, x2, and y2) must not be transmitted.

6-22 Overwrite Mode

ASCII Format	<US><MD1>	<ESC><DC1>	
Dec. Format	31, 1	27, 17	
Hex. Format	[1Fh] [01h]	[1Bh] [11h]	
Description	Selects overwrite mode as the screen display mode. In overwrite mode, entering a character code moves the cursor to the left end of the lower line when the cursor is at the right end of the upper line, and to the left end of the upper line when the cursor is at the right end of the lower line. This mode is selected when the power is turned on. Selecting overwrite mode cancels horizontal or vertical scroll mode. Except when the cursor is at the right end, entering a character code moves the cursor one character to the right after displaying the character.		

6-23 Vertical Scroll Mode

ASCII Format	<US><MD2>	<ESC><DC2>	
Dec. Format	31, 2	27, 18	
Hex. Format	[1Fh] [02h]	[1Bh] [12h]	
Description	Selects vertical scroll mode as the screen display mode. In vertical scroll mode, entering a character code moves the cursor to the left end of the lower line when the cursor is at the right end of the upper line, scrolls the characters displayed on the lower line to the upper line, and clears the lower line when the cursor is at the right end of the lower line. At this time, the cursor is moved to the left end of the lower line. Selecting vertical scroll mode cancels overwrite or horizontal scroll mode. Except when the cursor is at the right end, entering a character code moves the cursor one character to the right after displaying the character.		

6-24 Horizontal Scroll Mode

ASCII Format	<US><MD3>	<ESC><DC3>	
Dec. Format	31, 3		
Hex. Format	[1Fh] [03h]	[1Bh] [13h]	
Description	Selects horizontal scroll mode as the screen display mode. In horizontal scroll mode, entering a character code scrolls all displayed characters (including commas and periods) one character to the left, then displays the new character at the right end (when the cursor is at the right end of either line). Selecting horizontal scroll mode cancels overwrite or vertical scroll mode. Except when the cursor is at the right end, entering a character code moves the cursor one character to the right after displaying the character.		

6-25 Set Display Screen Blink Interval

ASCII Format	<US> E n		
Dec. Format	31, 69, n		
Hex. Format	[1Fh] [45h] n		
Description	Sets or cancels the blink interval of the display screen. (0 ≤ n ≤ 255) n specifies the blink interval. [(n*50ms.) ON / (n*50ms.) OFF] is repeated. When n=0, the display is kept on (cancels blinking). When n=255, the display is turned off but the contents of the display are maintained.		

6-26 Set and Display Counter (Set Time)

ASCII Format	<US> T h m		
Dec. Format	31, 84, h m		
Hex. Format	[1Fh] [54h] h m		
Description	The counter time is set and displayed at the right side of the bottom line. * h is hours, and m is minutes. (0 ≤ h ≤ 23, 0 ≤ m ≤ 59) When this command is entered, the screen is cleared and the time is displayed in 24-mode at the right side of the bottom line. The time counter start from the transmitted code h:m:00. After the time is displayed, the cursor moves to the home position. The counter display disappears when any of the following occurs : 1) The cursor moves to the bottom line. 2) Display characters move to the bottom line. 3) the <CLR> command is received. Even if the time counter is cleared, it continues to be updated in the display.		

6-27 Display Counter (Display Time)

ASCII Format	**<US> U**		
Dec. Format	**31, 85**		
Hex. Format	**[1Fh] [55h]**		
Description	**Displays the time counter at the right side of the bottom line.** **If the time has already been set using the "<US> T h m" command, the elapsed time is displayed in real time in the format "hours : minutes : seconds".** **If the time has not yet been set, the elapsed time (from when the counter was initialized by turning on the power or from the "<ESC> @" command) is displayed in real time in the format "hours : minutes : seconds". After the counter is displayed, the cursor moves to the home position.** **The counter display is cleared when any of the following occurs :** **1) The cursor moves to the bottom line.** **2) Display characters move to the bottom line.** **3) the <CLR> command is received.** **Even if the time counter is cleared, it continues to be updated in the display.**		
Example	**1) Counter display just before receiving "<US> T h m" :**		

H	A	V	E		A		N	I	C	E		D	A	Y	!	!			
S	U	B	-	T	O	T	A	L						$	3	2	.	9	5

[Example] Display Before Setting the Counter

2) "<US> T h m" (1Fh 54h 17 35) is received :

_																			
												1	7	:	3	5	:	0	0

[Example] Counter Setting Indication

Above screen "HAVE A NICE DAY!! / SUB-TOTAL $32.95" is cleared, and the input time is displayed at the right side of the lower line ; counting begins from "17:35:00" seconds.

At this time, the cursor moves to the home position indicated by "_".

3) Display data "Welcome to E-SHOP!" is received :

W	e	l	c	o	m	e		t	o		E	-	S	H	O	P	!	_	
												1	7	:	3	5	:	0	0

[Example] Indication When the Cursor Does Not Move

Counter display in the bottom line has no effect on data displayed in the top line.

4) <LF> (0Ah) is received :

W	e	l	c	o	m	e		t	o		E	-	S	H	O	P	!		
																		_	

[Example] Indication When the Cursor Moves

Moving the cursor to the bottom line clears the time display, but counting continues internally. (Above example shows assumed overwrite mode.)

6-28 Brightness Adjustment (Dimming Control)

ASCII Format	**<US> X m**	**<ESC> * n**	
Dec. Format	**31, 88, n**	**27, 42, n**	
Hex. Format	**[1Fh] [58h] n**	**[1Bh] [2Ah] n**	
Description	**Set the brightness of the fluorescent character display tube. n selects the percentage of brightness as follows :** *** n=01h, Brightness=20%** *** n=02h, Brightness=40%** *** n=03h, Brightness=60%** *** n=04h, Brightness=100% (default)**		

6-29 Turn Reversed Character Mode On/Off

ASCII Format	<US> r n		
Dec. Format	31, 114, n		
Hex. Format	[1Fh] [72h] n		
Description	Selects or cancels reverse display of the characters received after this command. * n=00h or 30h, reverse characters are canceled. * n=01h or 31h, reverse characters are selected.		

6-30 Status Confirmation by DTR Signal

ASCII Format	<US> v n		
Dec. Format	31, 118, n		
Hex. Format	[1Fh] [76h] n		
Description	Sets the DTR signal in the host interface to the MARK or SPACE state. When n=01h or 31h, the DTR signal goes to the MARK state, if it is already in the MARK state, the DTR signal does not change. When n=00h or 30h, the DTR signal goes to the SPACE state if the following conditions are satisfied, if it is already SPACE when n=0 is received, the DTR signal does not change : 1) The receive buffer is not in the buffer-full state. 2) The self-test is not being executed. This command is effective only when the display alone is selected by "<ESC> = 2" (printer disable & display enable). Therefore, if the printer is already selected this command (three bytes) is ignored and is processed as normal data. (The data is transmitted to the printer.) If any data is received during status confirmation using the DTR signal, normal interface timing control is executed immediately.		

6-31 Execute Self-test

ASCII Format	<US> @		
Dec. Format	31, 64		
Hex. Format	[1Fh] [40h]		
Description	A series of self-test is displayed. All set values except those listed below are initialized : 1) User-defined character definitions 2) Macro definitions 3) Time counter value After completion of the self-test, the screen is cleared and the display position is moved to the home position.		

6-32 Start/End Macro Definition

ASCII Format	<US> :		
Dec. Format	31, 58		
Hex. Format	[1Fh] [3Ah]		
Description	Starts or ends a macro definition. Up to 80 bytes can be defined for macro processing (one byte per character). Macro definition processing starts with the first "<US> :" command and end with the second "<US> :" command. Receipt of either of the two types of data shown below is regarded as a macro definition error. Macro definition processing is stopped, and any following data is processed as normal data. At this time, the macro remains undefined. 1) The "<US> ^" command is received during a macro processing definition. 2) A macro processing definition exceeds 80 bytes (except for the "<US> :" command). To delete a macro definition, send a "<US> :" command just after "<US> :".		

6-33 Execute and Quit Defined Macro

ASCII Format	**<US> ^ n m**		
Dec. Format	**31, 94, n m**		
Hex. Format	**[1Fh] [5Eh] n m**		
Description	**Executes the process defined as a macro. (00h ≤ n ≤ FFh, 00h ≤ m ≤ FFh)** **n specifies the time interval for displaying characters in units of [n*20msec] when a macro is executed. This specifies the time interval before displaying each successive character but does not affect the processing speed of command codes.** **m specifies the interval of execution. Where macro processing is repeated, it starts over from the beginning after the completion state of the previous macro processing is held for [m*50msec].** **If data is received from the host during macro processing, the macro processing is terminated. After macro processing is finished, the current window is cleared and the cursor is moved to the home position in the current window. Display settings at the completion of macro processing remain valid. After macro processing is finished, the screen is cleared and the cursor is moved to the home position. Display settings in place at the completion of macro processing remain valid. If macro is undefined, this command is invalid and the display content is not affected. If "<ESC> = n", "<ESC> @", and "<US> @" are defined in the macro, these commands are ignored when executing the macro commands. Even if the printer is selected (by a peripheral device selection command) when macro processing is started, data is not transmitted to the printer during macro processing.**		

Example

1) Star Macro.....	**<US> : .....**	**1Fh, 3Ah**
2) Clear Display.....	**<CLR> .....**	**0Ch**
3) Set Blink (interval=0, blink off).....	**<US> E 0 .....**	**1Fh, 45h, 00h**
4) Displayed Character.....	**WELCOME TO SAMSUNG!!**	
5) Set Blink (interval=10*50ms=0.5s).....	**<US> E 10 .....**	**1Fh, 45h, 0Ah**
6) End Macro.....	**<US> : .....**	**1Fh, 3Ah**
7) Execute Macro (n=10, m=100).....	**<US> ^ 10 100 .....**	**1Fh, 5Eh, 0Ah, 64h**

*** 1) is the starting command and 6) is the ending command of a macro definition.**
*** Total 27-byte data from 2) to 5) is stored in the macro definition range. When the display receives the macro execution command, the defined data is in processed order.**
*** 2) is a screen clear command.**
*** 3) and 5) are blinking commands.**
*** Macro execution is started by #7). The time interval for displaying the characters is 200ms (n*20ms, n=10). When 100ms has passed after the character "W" has been displayed, the next character, "E" is displayed.**

W																			

After 200ms (n*20ms, n=10) interval

W	E																		

After 200ms (n*20ms, n=10) interval

W	E	L																	

The macro execution interval is 5 seconds (m*50ms, m=100). After the blinking display show in the figure below is held for 5 seconds, macro processing is repeated from a clear screen.

W	E	L	C	O	M	E		T	O		S	A	M	S	U	N	G	!	!

6-34 Display Period

ASCII Format	**<US> . n**		
Dec. Format	**31, 46, n**		
Hex. Format	**[1Fh] [2Eh] n**		
Description	**Displays the specified character n and a period to the right of the character. (20h ≤ n ≤ FFh)** **n indicates a displayable character code.** **The period is displayed once only for the specified character n and is not displayed for subsequent characters.** **In overwrite mode, if any other character is written in the character position for which the period was displayed, the period is cleared.** **In vertical scroll mode, if the display position of the character for which the period was displayed is moved, the period moves with the character.** **In horizontal scroll mode, if the display position of the character for which the period was displayed is moved, the period moves with the character.** **The cursor moves one character to the right after displaying the period.** **The command is not valid for user-defined characters.**		

6-35 Display Comma

ASCII Format	**<US> , n**		
Dec. Format	**31, 44, n**		
Hex. Format	**[1Fh] [2Ch] n**		
Description	**Displays the specified character n and a period to the right of the character. (20h ≤ n ≤ FFh)** **n indicates a displayable character code.** **The comma is displayed once only for the specified character n and is not displayed for subsequent characters.** **In overwrite mode, if any other character is written in the character position for which the comma was displayed, the comma moves with the character.** **In horizontal scroll mode, if the display position of the character for which the comma was displayed is moved, the comma moves with the character.** **The cursor moves one character to the right after displaying the comma.** **The command is not valid for user-defined characters.**		

6-36 Display Period and Comma

ASCII Format	**<US> ; n**		
Dec. Format	**31, 59, n**		
Hex. Format	**[1Fh] [3Bh] n**		
Description	**Displays the specified character n and a semicolon (period and comma) to the right of the character. (20h ≤ n ≤ FFh)** **n indicates a displayable character code.** **The semicolon is displayed once only for the specified character n and is not displayed for subsequent characters.** **In overwrite mode, if any other character is written in the character position for which the semicolon was displayed, the semicolon is cleared.** **In vertical scroll mode, if the display position of the character for which the semicolon was displayed is moved, the semicolon moves with the character.** **In horizontal scroll mode, if the display position of the character for which the semicolon was displayed is moved, the semicolon moves with the character.** **The cursor moves one character to the right after displaying the semicolon.** **The command is not valid for user-defined characters.**		

6-37 Turn Annunciator On/Off

ASCII Format	**<US> # n m**		
Dec. Format	**31, 35, n, m**		
Hex. Format	**[1Fh] [23h] n m**		
Description	**Turns the annunciator at column m on or off. (n=00h, 01h, 30h or 31h, 0 ≤ m ≤ 20) When n=00h or 30h, the annunciator at column m is turned off. When n=01h or 31h, the annunciator at column m is turned on. m specifies the column number (the left-most column is column 1) where the annunciator to be turned on or off is located. However, when m equals 0, annunciators are either turned off or on, based on the corresponding value of n. The specification to turn on the annunciator (n=1) remains valid until : 1) The annunciator is turned off using this command (n=0). 2) The "<ESC> @", "<US> @", or "<CLR>" command is executed. 3) The power is turned off.**		

6-38 Set Cursor On/Off

ASCII Format	**<US> C n**	**<ESC> _ n**	
Dec. Format	**31, 67, n**	**29, 95, n**	
Hex. Format	**[1Fh] [43h] n**	**[1Fh] [5Fh] n**	
Description	**Set cursor ON or OFF (n=0 or 1). When n=00h, cursor is turned off. When n=01h, cursor is turned on.**		

6-39 Set Line Blinking

ASCII Format	**<US><DC1> n**		
Dec. Format	**31, 17, n**		
Hex. Format	**[1Fh] [11h] n**		
Description	**Set line blinking (n=31h or 32h). When n=31h, Upper line blinking. When n=32h, Lower line blinking.**		

6-40 Clear Line Blinking

ASCII Format	**<US><DC2> n**		
Dec. Format	**31, 18, n**		
Hex. Format	**[1Fh] [12h] n**		
Description	**Clear line blinking (n=31h or 32h). When n=31h, Clear upper line blinking. When n=32h, Clear lower line blinking.**		

6-41 Write String Character to Upper Line

ASCII Format	<ESC> Q A d1 d2 d3 d4...dn <CR>	<ESC> F A d1 d2 d3 d4...dn <CR>
Dec. Format	27, 81, 65, d1, d2, d3, d4,...dn, 13	27, 70, 65, d1, d2, d3, d4,...dn, 13
Hex. Format	[1Bh] [51h] [41h] d1 d2 d3 d4...dn [0Dh]	[1Bh] [46h] [41h] d1 d2 d3 d4...dn [0Dh]
Description	Set the string display mode, write to upper line d1 d2 d3 d4...dn. (1≤n≤20, 20h≤dn≤FFh) The string display mode will be cancelled and revert back to the last mode after receiving either "<CLR>" or "<CAN>".	

6-42 Write String Character to Lower Line

ASCII Format	<ESC> Q B d1 d2 d3 d4...dn <CR>	<ESC> Q B d1 d2 d3 d4...dn <CR>
Dec. Format	27, 81, 66, d1, d2, d3, d4,...dn, 13	27, 70, 66, d1, d2, d3, d4,...dn, 13
Hex. Format	[1Bh] [51h] [42h] d1 d2 d3 d4...dn [0Dh]	[1Bh] [46h] [42h] d1 d2 d3 d4...dn [0Dh]
Description	Set the string display mode, write to lower line d1 d2 d3 d4...dn. (1≤n≤20, 20h≤dn≤FFh) The string display mode will be cancelled and revert back to the last mode after receiving either "<CLR>" or "<CAN>".	

6-43 Upper Line Message Scroll Continuously

ASCII Format	<ESC> Q D d1 d2 d3 d4...dn <CR>	<ESC> F D d1 d2 d3 d4...dn <CR>
Dec. Format	27, 81, 68, d1, d2, d3, d4,...dn, 13	27, 70, 68, d1, d2, d3, d4,...dn, 13
Hex. Format	[1Bh] [51h] [44h] d1 d2 d3 d4...dn [0Dh]	[1Bh] [46h] [44h] d1 d2 d3 d4...dn [0Dh]
Description	The upper line message will scroll continuously in the horizontal direction until a new command is received. (1≤n≤40, 20h≤dn≤FFh) The string display mode will be cancelled and revert back to the last mode after receiving either "<CLR>" or "<CAN>".	

6-44 Lower Line Message Scroll Continuously

ASCII Format	<ESC> Q O d1 d2 d3 d4...dn <CR>	<ESC> F O d1 d2 d3 d4...dn <CR>
Dec. Format	27, 81, 79, d1, d2, d3, d4,...dn, 13	27, 70, 79, d1, d2, d3, d4,...dn, 13
Hex. Format	[1Bh] [51h] [44h] d1 d2 d3 d4...dn [0Dh]	[1Bh] [46h] [44h] d1 d2 d3 d4...dn [0Dh]
Description	The lower line message will scroll continuously in the horizontal direction until a new command is received. (1≤n≤40, 20h≤dn≤FFh) The string display mode will be cancelled and revert back to the last mode after receiving either "<CLR>" or "<CAN>".	

7. Code Table

7-1 ASCII Code Table

Dec.	Hex.	Char.	ASCII Function	Description
0	00h	Ctrl-@	<NUL>	Null
1	01h	Ctrl-A	<SOH> or <MD1>	Start of Heading
2	02h	Ctrl-B	<STX> or <MD2>	Start of Text
3	03h	Ctrl-C	<ETX> or <MD3>	End of Text
4	04h	Ctrl-D	<EOT> or <MD4>	End of Transmission
5	05h	Ctrl-E	<ENQ> or <MD5>	Enquiry
6	06h	Ctrl-F	<ACK> or <MD6>	Acknowledge
7	07h	Ctrl-G	<BEL> or <MD7>	Bell (audible or attention signal)
8	08h	Ctrl-H	<BS> or <MD8>	Backspace
9	09h	Ctrl-I	<HT>	Horizontal Tabulation
10	0Ah	Ctrl-J	<LF> or <NL>	Line Feed or New Line
11	0Bh	Ctrl-K	<VT> or <HOM>	Vertical Tabulation or Home
12	0Ch	Ctrl-L	<FF> or <NP>	Form Feed or New Page
13	0Dh	Ctrl-M	<CR>	Carriage Return
14	0Eh	Ctrl-N	<SO> or <SLE1>	Shift Out
15	0Fh	Ctrl-O	<SI> or <SLE2>	Shift In
16	10h	Ctrl-P	<DLE>	Data Link Escape
17	11h	Ctrl-Q	<DC1>	Device Control 1
18	12h	Ctrl-R	<DC2>	Device Control 2
19	13h	Ctrl-S	<DC3>	Device Control 3
20	14h	Ctrl-T	<DC4>	Device Control 4 (Stop)
21	15h	Ctrl-U	<NAK>	Negative Acknowledge
22	16h	Ctrl-V	<SYN>	Synchronous Idle
23	17h	Ctrl-W	<ETB>	End of Transmission Block
24	18h	Ctrl-X	<CAN>	Cancel
25	19h	Ctrl-Y	<EM>	End of Medium
26	1Ah	Ctrl-Z	<SUB>	Substitute
27	1Bh	Ctrl-[	<ESC>	Escape
28	1Ch	Ctrl-\	<FS>	File Separator
29	1Dh	Ctrl-]	<GS>	Group Separator
30	1Eh	Ctrl-^	<RS> or <SF1>	Record Separator
31	1Fh	Ctrl-_	<US> or <SF2>	Unit Separator

Dec.	Hex.	Char.	Dec.	Hex.	Char.	Dec.	Hex.	Char.	Dec.	Hex.	Char.	Dec.	Hex.	Char.	Dec.	Hex.	Char.
32	20h	SP	48	30h	0	64	40h	@	80	50h	P	96	60h	`	112	70h	p
33	21h	!	49	31h	1	65	41h	A	81	51h	Q	97	61h	a	113	71h	q
34	22h	“	50	32h	2	66	42h	B	82	52h	R	98	62h	b	114	72h	r
35	23h	#	51	33h	3	67	43h	C	83	53h	S	99	63h	c	115	73h	s
36	24h	$	52	34h	4	68	44h	D	84	54h	T	100	64h	d	116	74h	t
37	25h	%	53	35h	5	69	45h	E	85	55h	U	101	65h	e	117	75h	u
38	26h	&	54	36h	6	70	46h	F	86	56h	V	102	66h	f	118	76h	v
39	27h	‘	55	37h	7	71	47h	G	87	57h	W	103	67h	g	119	77h	w
40	28h	(	56	38h	8	72	48h	H	88	58h	X	104	68h	h	120	78h	x
41	29h	)	57	39h	9	73	49h	I	89	59h	Y	105	69h	i	121	79h	y
42	2Ah	*	58	3Ah	:	74	4Ah	J	90	5Ah	Z	106	6Ah	j	122	7Ah	z
43	2Bh	+	59	3Bh	;	75	4Bh	K	91	5Bh	[	107	6Bh	k	123	7Bh	{
44	2Ch	,	60	3Ch	<	76	4Ch	L	92	5Ch	\	108	6Ch	l	124	7Ch	|
45	2Dh	-	61	3Dh	=	77	4Dh	M	93	5Dh	]	109	6Dh	m	125	7Dh	}
46	2Eh	.	62	3Eh	>	78	4Eh	N	94	5Eh	^	110	6Eh	n	126	7Eh	~
47	2Fh	/	63	3Fh	?	79	4Fh	O	95	5Fh	_	111	6Fh	o	127	7Fh	DEL

7-2 5*7 Dot Matrix Character Font Table (ASCII with pc-437)

	HEX	0	1	2	3	4	5	6	7	8	9	A	B	C	D	E	F
HEX	BIN	0000	0001	0010	0011	0100	0101	0110	0111	1000	1001	1010	1011	1100	1101	1110	1111
0	0000	NUL 00	DLE 16	SP 32	0 48	@ 64	P 80	` 96	p 112	Ç 128	É 144	á 160	▒ 176	└ 192	╨ 208	α 224	≡ 240
1	0001	01	XON 17	! 33	1 49	A 65	Q 81	a 97	q 113	ü 129	æ 145	í 161	▓ 177	┴ 193	╤ 209	β 225	± 241
2	0010	02	18	" 34	2 50	B 66	R 82	b 98	r 114	é 130	Æ 146	ó 162	│ 178	┬ 194	╥ 210	Γ 226	≤ 242
3	0010	03	XOFF 19	% 35	3 51	C 67	S 83	c 99	s 115	â 131	ô 147	ú 163	┤ 179	├ 195	╙ 211	π 227	≥ 243
4	0100	EQT 04	20	$ 36	4 52	D 68	T 84	d 100	t 116	ä 132	ö 148	ñ 164	╡ 180	─ 196	╘ 212	Σ 228	⌠ 244
5	0101	ENQ 05	21	% 37	5 53	E 69	U 85	e 101	u 117	à 133	ò 149	Ñ 165	╢ 181	┼ 197	╒ 213	σ 229	⌡ 245
6	0110	06	22	& 38	6 54	F 70	V 86	f 102	v 118	å 134	û 150	ª 166	╖ 182	╞ 198	╓ 214	µ 230	÷ 246
7	0111	07	23	' 39	7 55	G 71	W 87	g 103	w 119	ç 135	ù 151	º 167	╕ 183	╟ 199	╫ 215	τ 231	≈ 247
8	1000	BS 08	CAN 24	(40	8 56	H 72	X 88	h 104	x 120	ê 136	ÿ 152	¿ 168	╗ 184	╚ 200	╪ 216	Φ 232	° 249
9	1001	HT 09	25	) 41	9 57	I 73	Y 89	i 105	y 121	ë 137	ö 153	⌐ 169	╘ 185	╔ 201	╘ 217	θ 233	• 249
A	1010	LF 10	26	* 42	: 58	J 74	Z 90	j 106	z 122	è 138	Ü 154	¬ 170	╜ 186	╩ 202	┌ 218	Ω 234	• 250
B	1011	11	ESC 27	+ 43	; 59	K 75	[91	k 107	{ 123	ï 139	¢ 155	1/2 171	╖ 187	╦ 203	╗ 219	δ 235	√ 251
C	1100	FF 12	FS 28	, 44	< 60	L 76	\ 92	l 108	¦ 124	î 140	£ 156	1/4 172	╝ 188	╠ 204	╝ 220	∞ 236	n 252
D	1101	CR 13	GS 29	– 45	= 61	M 77	] 93	m 109	} 125	ì 141	¥ 157	¡ 173	╜ 189	═ 205	╛ 221	ϕ 237	2 253
E	1110	14	30	. 46	> 62	N 78	‾ 94	n 110	~ 126	Ä 142	₧ 158	« 174	╛ 190	╬ 206	╛ 222	∈ 238	■ 254
F	1111	15	31	/ 47	? 63	O 79	_ 95	o 111	SP 127	Å 143	ƒ 159	» 175	┐ 191	╧ 207	■ 223	∩ 239	SP 255

7-3 International Code Set (Font Map)

	Country	ASCII code (hexadecimal number)											
		23	24	40	5B	5C	5D	5E	60	7B	7C	7D	7E
0	U.S.A	#	$	@	[	\	]	^	‘	{	|	}	~
1	France	#	$	à	°	ç	§	^	‘	é	ù	è	¨
2	Germany	#	$	§	Ä	Ö	Ü	^	‘	ä	ö	ü	ß
3	U.K.	£	$	@	[	\	]	^	‘	{	|	}	~
4	Denmark I	#	$	@	Æ	Ø	Å	^	‘	æ	ø	å	~
5	Sweden	#	¤	É	Ä	Ö	Å	Ü	é	ä	ö	å	ü
6	Italy	#	$	@	°	\	é	^	ù	à	ò	è	ì
7	Spain	Pt	$	@	¡	Ñ	¿	^	‘	¨	ñ	}	~
8	Japan	#	$	@	[	¥	]	^	‘	{	|	}	~
9	Norway	#	¤	É	Æ	Ø	Å	Ü	é	æ	ø	å	ü
10	Denmark II	#	$	É	Æ	Ø	Å	Ü	é	æ	ø	å	ü
11	Spain 2	#	$	á	¡	Ñ	¿	é	‘	í	ñ	ó	ú
12	LATIN AMERICA	#	$	á	¡	Ñ	¿	é	ü	í	ñ	ó	ú
13	KOREA	#	$	@	[	₩	]	^	‘	{	¦	}	~
14	SLOVENIA /CROATIA	#	$	Ž	Š	Đ	Ć	Č	ž	š	đ	ć	č
15	CHINA	#	￥	@	[	\	]	^	‘	{	¦	}	~

7-4 5*7 dot Matrix Character Font Table (Code Area = 80h ~ FFh)

7-4-1 PC-437 (Standard European / U.S Script) Character Font Table

	HEX	0	1	2	3	4	5	6	7	8	9	A	B	C	D	E	F
HEX	BIN	0000	0001	0010	0011	0100	0101	0110	0111	1000	1001	1010	1011	1100	1101	1110	1111
0	0000	NUL 00	DLE 16	SP 32	0 48	@ 64	P 80	` 96	p 112	Ç 128	É 144	á 160	░ 176	└ 192	╨ 208	α 224	≡ 240
1	0001	01	XON 17	! 33	1 49	A 65	Q 81	a 97	q 113	ü 129	æ 145	í 161	▒ 177	┴ 193	╤ 209	β 225	± 241
2	0010	02	18	" 34	2 50	B 66	R 82	b 98	r 114	é 130	Æ 146	ó 162	▓ 178	┬ 194	╥ 210	Γ 226	≤ 242
3	0010	03	XOFF 19	% 35	3 51	C 67	S 83	c 99	s 115	â 131	ô 147	ú 163	│ 179	├ 195	╙ 211	π 227	≥ 243
4	0100	EQT 04	20	$ 36	4 52	D 68	T 84	d 100	t 116	ä 132	ö 148	ñ 164	┤ 180	─ 196	╘ 212	Σ 228	⌠ 244
5	0101	ENQ 05	21	% 37	5 53	E 69	U 85	e 101	u 117	à 133	ò 149	Ñ 165	╡ 181	┼ 197	╒ 213	σ 229	⌡ 245
6	0110	06	22	& 38	6 54	F 70	V 86	f 102	v 118	å 134	û 150	ª 166	╢ 182	╞ 198	╓ 214	µ 230	÷ 246
7	0111	07	23	' 39	7 55	G 71	W 87	g 103	w 119	ç 135	ù 151	º 167	╖ 183	╟ 199	╫ 215	τ 231	≈ 247
8	1000	BS 08	CAN 24	(40	8 56	H 72	X 88	h 104	x 120	ê 136	ÿ 152	¿ 168	╕ 184	╚ 200	╪ 216	Φ 232	° 249
9	1001	HT 09	25	) 41	9 57	I 73	Y 89	i 105	y 121	ë 137	ö 153	⌐ 169	╣ 185	╔ 201	┘ 217	θ 233	• 249
A	1010	LF 10	26	* 42	: 58	J 74	Z 90	j 106	z 122	è 138	Ü 154	¬ 170	║ 186	╩ 202	┌ 218	Ω 234	• 250
B	1011	11	ESC 27	+ 43	; 59	K 75	[91	k 107	{ 123	ï 139	¢ 155	1/2 171	╗ 187	╦ 203	█ 219	δ 235	√ 251
C	1100	FF 12	FS 28	, 44	< 60	L 76	\ 92	l 108	¦ 124	î 140	£ 156	1/4 172	╝ 188	╠ 204	▄ 220	∞ 236	n 252
D	1101	CR 13	GS 29	– 45	= 61	M 77	] 93	m 109	} 125	ì 141	¥ 157	¡ 173	╜ 189	═ 205	▌ 221	ϕ 237	2 253
E	1110	14	30	. 46	> 62	N 78	‾ 94	n 110	~ 126	Ä 142	₧ 158	« 174	╛ 190	╬ 206	▐ 222	∈ 238	■ 254
F	1111	15	31	/ 47	? 63	O 79	_ 95	o 111	SP 127	Å 143	ƒ 159	» 175	┐ 191	╧ 207	▀ 223	∩ 239	SP 255

7-4-2 Japanese Katakana (JIS) Character Code Set

	HEX	8	9	A	B	C	D	E	F
HEX	BIN	1000	1001	1010	1011	1100	1101	1110	1111
0	0000	128	144	SP 160	ー 176	タ 192	ミ 208	224	240
1	0001	129	145	。 161	ア 177	チ 193	ム 209	225	円 241
2	0010	130	146	「 162	イ 178	ツ 194	メ 210	226	年 242
3	0011	131	147	」 163	ウ 179	テ 195	モ 211	227	月 243
4	0100	132	148	、 164	エ 180	ト 196	ヤ 212	228	日 244
5	0101	133	149	・ 165	オ 181	ナ 197	ユ 213	229	時 245
6	0110	134	150	ヲ 166	カ 182	ニ 198	ヨ 214	230	分 246
7	0111	135	151	ァ 167	キ 183	ヌ 199	ラ 215	231	秒 247
8	1000	136	152	ィ 168	ク 184	ネ 200	リ 216	♠ 232	〒 248
9	1001	137	153	ゥ 169	ケ 185	ノ 201	ル 217	♥ 233	市 249
A	1010	138	154	ェ 170	コ 186	ハ 202	レ 218	◆ 234	区 250
B	1011	139	155	ォ 171	サ 187	ヒ 203	ロ 219	♣ 235	町 251
C	1100	140	156	ャ 172	シ 188	フ 204	ワ 220	● 236	村 252
D	1101	141	157	ュ 173	ス 189	ヘ 205	ン 221	○ 237	人 253
E	1110	142	158	ョ 174	セ 190	ホ 206	゛ 222	／ 238	▒ 254
F	1111	┼ 143	159	ッ 175	ソ 191	マ 207	゜ 223	＼ 239	SP 255

7-4-3 PC-850 (Multilingual International) Character Font Table

	HEX	8	9	A	B	C	D	E	F
HEX	BIN	1000	1001	1010	1011	1100	1101	1110	1111
0	0000	Ç 128	É 144	á 160	░ 176	╚ 192	ð 208	Ó 224	¯ 240
1	0001	ü 129	æ 145	í 161	▒ 177	╩ 193	Ð 209	ß 225	± 241
2	0010	é 130	Æ 146	ó 162	▓ 178	╦ 194	É 210	Ô 226	‗ 242
3	0010	â 131	ô 147	ú 163	│ 179	╠ 195	Ë 211	Ò 227	3/4 243
4	0100	ä 132	ö 148	ñ 164	┤ 180	═ 196	È 212	õ 228	244
5	0101	à 133	ò 149	Ñ 165	Á 181	╬ 197	ı 213	Õ 229	§ 245
6	0110	å 134	û 150	ª 166	Â 182	ã 198	ˆ 214	µ 230	÷ 246
7	0111	ç 135	ù 151	º 167	À 183	Ã 199	Î 215	þ 231	¸ 247
8	0000	ê 136	ÿ 152	¿ 168	© 184	╚ 200	ï 216	Þ 232	° 249
9	0001	ë 137	Ö 153	® 169	╣ 185	╔ 201	┘ 217	Ú 233	¨ 249
A	0010	è 138	Ü 154	¬ 170	║ 186	╩ 202	┌ 218	Û 234	• 250
B	0011	ï 139	ø 155	1/2 171	╗ 187	╦ 203	█ 219	Ù 235	¹ 251
C	0100	î 140	£ 156	1/4 172	╝ 188	╠ 204	▄ 220	ý 236	³ 252
D	0101	ì 141	Ø 157	¡ 173	¢ 189	═ 205	¦ 221	Ý 237	² 253
E	0110	Ä 142	× 158	« 174	¥ 190	╬ 206	Ì 222	¯ 238	▪ 254
F	0111	Å 143	ƒ 159	» 175	┐ 191	¤ 207	▀ 223	´ 239	SP 255

7-4-4 PC-860 (Portuguese) Character Font Table

	HEX	8	9	A	B	C	D	E	F
HEX	BIN	1000	1001	1010	1011	1100	1101	1110	1111
0	0000	Ç 128	É 144	á 160	▒ 176	└ 192	╨ 208	α 224	≡ 240
1	0001	ü 129	À 145	í 161	▓ 177	┴ 193	╤ 209	β 225	± 241
2	0010	é 130	É 146	ó 162	╢ 178	┬ 194	╥ 210	Γ 226	≤ 242
3	0010	â 131	ô 147	ú 163	│ 179	├ 195	╙ 211	π 227	≥ 243
4	0100	ä 132	õ 148	ñ 164	┤ 180	─ 196	╘ 212	Σ 228	⌠ 244
5	0101	à 133	ò 149	Ñ 165	╡ 181	┼ 197	╒ 213	σ 229	⌡ 245
6	0110	Á 134	ú 150	ª 166	╣ 182	╞ 198	╓ 214	µ 230	÷ 246
7	0111	ç 135	ù 151	º 167	╗ 183	╟ 199	╫ 215	τ 231	≈ 247
8	1000	ê 136	Ì 152	¿ 168	╝ 184	╚ 200	╪ 216	Φ 232	° 249
9	1001	Ê 137	õ 153	Ò 169	╜ 185	╔ 201	┘ 217	θ 233	• 249
A	1010	è 138	Ü 154	¬ 170	╖ 186	╩ 202	┌ 218	Ω 234	• 250
B	1011	Í 139	¢ 155	1/2 171	╕ 187	╦ 203	█ 219	δ 235	√ 251
C	1100	Ô 140	£ 156	1/4 172	╛ 188	╠ 204	▄ 220	∞ 236	n 252
D	1101	ì 141	Ù 157	¡ 173	╜ 189	═ 205	▌ 221	φ 237	² 253
E	1110	Ã 142	Pt 158	« 174	╛ 190	╬ 206	▐ 222	238	■ 254
F	1111	Â 143	Ó 159	» 175	┐ 191	╧ 207	▀ 223	239	SP 255

7-4-5 PC-863 (Canadian French) Character Font Table

	HEX	8	9	A	B	C	D	E	F
HEX	BIN	1000	1001	1010	1011	1100	1101	1110	1111
0	0000	Ç 128	É 144	¦ 160	▓ 176	└ 192	╨ 208	α 224	240
1	0001	ü 129	É 145	´ 161	▒ 177	┴ 193	╤ 209	β 225	± 241
2	0010	é 130	Ê 146	ó 162	⁞ 178	┬ 194	╥ 210	Γ 226	≥ 242
3	0010	â 131	ô 147	ú 163	│ 179	├ 195	╙ 211	π 227	≤ 243
4	0100	Â 132	Ë 148	¨ 164	┤ 180	─ 196	╘ 212	Σ 228	⌠ 244
5	0101	à 133	Ï 149	° 165	╡ 181	┼ 197	╒ 213	σ 229	⌡ 245
6	0110	134	û 150	³ 166	╢ 182	╞ 198	╓ 214	µ 230	÷ 246
7	0111	ç 135	ù 151	¯ 167	╖ 183	╟ 199	╫ 215	τ 231	≈ 247
8	1000	ê 136	¤ 152	Î 168	╕ 184	╚ 200	╪ 216	Φ 232	° 249
9	1001	ë 137	Ô 153	⌐ 169	╣ 185	╔ 201	┘ 217	θ 233	• 249
A	1010	è 138	Ü 154	¬ 170	║ 186	╩ 202	┌ 218	Ω 234	· 250
B	1011	Ï 139	¢ 155	1/2 171	╗ 187	╦ 203	█ 219	δ 235	251
C	1100	î 140	£ 156	1/4 172	╝ 188	╠ 204	▄ 220	∞ 236	n 252
D	1101	‗ 141	Ù 157	3/4 173	╜ 189	═ 205	▌ 221	φ 237	² 253
E	1110	À 142	Û 158	« 174	╛ 190	╬ 206	▐ 222	238	■ 254
F	1111	§ 143	ƒ 159	» 175	┐ 191	╧ 207	▀ 223	239	SP 255

7-4-6 PC-865 (Nordic) Character Font Table

	HEX	8	9	A	B	C	D	E	F
HEX	BIN	1000	1001	1010	1011	1100	1101	1110	1111
0	0000	Ç 128	É 144	á 160	▒ 176	└ 192	╨ 208	α 224	240
1	0001	ü 129	æ 145	í 161	▓ 177	┴ 193	╤ 209	β 225	± 241
2	0010	é 130	Æ 146	ó 162	╫ 178	┬ 194	╥ 210	Γ 226	≥ 242
3	0010	â 131	ô 147	ú 163	│ 179	├ 195	╙ 211	π 227	≤ 243
4	0100	ä 132	ö 148	ñ 164	┤ 180	─ 196	╘ 212	Σ 228	⌠ 244
5	0101	à 133	ò 149	Ñ 165	╡ 181	┼ 197	╒ 213	σ 229	⌡ 245
6	0110	å 134	û 150	ª 166	╢ 182	╞ 198	╓ 214	µ 230	÷ 246
7	0111	ç 135	ù 151	º 167	╖ 183	╟ 199	╫ 215	τ 231	≈ 247
8	0000	ê 136	ÿ 152	¿ 168	╕ 184	╚ 200	╪ 216	Φ 232	° 249
9	0001	ë 137	Ö 153	⌐ 169	╣ 185	╔ 201	┘ 217	θ 233	• 249
A	0010	è 138	Ü 154	¬ 170	║ 186	╩ 202	┌ 218	Ω 234	· 250
B	0011	ï 139	ø 155	1/2 171	╗ 187	╦ 203	□ 219	δ 235	251
C	0100	î 140	£ 156	1/4 172	╝ 188	╠ 204	■ 220	∞ 236	n 252
D	0101	ì 141	Ø 157	¡ 173	╜ 189	═ 205	▌ 221	φ 237	² 253
E	0110	Ä 142	Pt 158	« 174	╛ 190	╬ 206	▐ 222	238	■ 254
F	0111	Å 143	ƒ 159	¤ 175	┐ 191	╧ 207	▀ 223	239	SP 255

7-4-7 WPC-1250 (Central European Windows Code Set) Character Font Table

	HEX	8	9	A	B	C	D	E	F
HEX	BIN	1000	1001	1010	1011	1100	1101	1110	1111
0	0000	€ 128	144	NBSP 160	° 176	Ŕ 192	Đ 208	ŕ 224	đ 240
1	0001	129	‘ 145	˘ 161	± 177	Á 193	Ń 209	á 225	ń 241
2	0010	‚ 130	’ 146	˘ 162	˛ 178	Â 194	Ň 210	â 226	ň 242
3	0011	ƒ 131	“ 147	£ 163	ł 179	Ă 195	Ó 211	ă 227	ó 243
4	0100	„ 132	” 148	¤ 164	´ 180	Ä 196	Ô 212	ä 228	ô 244
5	0101	… 133	• 149	Ą 165	µ 181	Ĺ 197	Õ 213	Í 229	ő 245
6	0110	† 134	– 150	¦ 166	¶ 182	Ć 198	Ö 214	ć 230	ö 246
7	0111	‡ 135	— 151	§ 167	· 183	Ç 199	× 215	ç 231	÷ 247
8	1000	ˆ 136	˜ 152	¨ 168	¸ 184	Č 200	Ř 216	č 232	ř 248
9	1001	‰ 137	TM 153	© 169	ą 185	É 201	Ů 217	é 233	ů 249
A	1010	Š 138	š 154	Ş 170	ş 186	Ę 202	Ú 218	ę 234	ú 250
B	1011	‹ 139	› 155	« 171	» 187	Ë 203	Ű 219	ë 235	ű 251
C	1100	Ś 140	ś 156	¬ 172	Ľ 188	Ě 204	Ü 220	ě 236	ü 252
D	1101	Ť 141	ť 157	- 173	˝ 189	Í 205	Ý 221	í 237	ý 253
E	1110	Ž 142	ž 158	® 174	ˇ 190	Î 206	Ţ 222	î 238	ţ 254
F	1111	Ź 143	ź 159	Ż 175	˙ 191	Ď 207	ß 223	ď 239	˙ 255

7-4-8 WPC-1251 (Cyrillic Windows Code Set) Character Font Table

	HEX	8	9	A	B	C	D	E	F
HEX	BIN	1000	1001	1010	1011	1100	1101	1110	1111
0	0000	Ђ 128	Ђ 144	NBSP 160	° 176	А 192	Р 208	а 224	р 240
1	0001	Ѓ 129	‘ 145	Ў 161	± 177	Б 193	С 209	б 225	с 241
2	0010	’ 130	’ 146	ў 162	І 178	В 194	Т 210	в 226	т 242
3	0011	ѓ 131	“ 147	Ј 163	і 179	Г 195	У 211	г 227	у 243
4	0100	” 132	” 148	¤ 164	ґ 180	Д 196	Ф 212	д 228	ф 244
5	0101	… 133	• 149	Ґ 165	µ 181	Е 197	Х 213	е 229	х 245
6	0110	† 134	– 150	¦ 166	¶ 182	Ж 198	Ц 214	ж 230	ц 246
7	0111	‡ 135	— 151	§ 167	· 183	З 199	Ч 215	з 231	ч 247
8	1000	€ 136	152	Ё 168	ё 184	И 200	Ш 216	и 232	ш 248
9	1001	‰ 137	™ 153	© 169	№ 185	Й 201	Щ 217	й 233	щ 249
A	1010	Љ 138	љ 154	Є 170	є 186	К 202	Ъ 218	к 234	ъ 250
B	1011	‹ 139	› 155	« 171	» 187	Л 203	Ы 219	л 235	ы 251
C	1100	Њ 140	њ 156	¬ 172	ј 188	М 204	Ь 220	м 236	ь 252
D	1101	Ќ 141	ќ 157	- 173	Ѕ 189	Н 205	Э 221	н 237	э 253
E	1110	Ћ 142	ћ 158	® 174	ѕ 190	О 206	Ю 222	о 238	ю 254
F	1111	Џ 143	џ 159	Ї 175	ї 191	П 207	Я 223	п 239	я 255

7-4-9 WPC-1252 (Western European Windows Code Set) Character Font Table

	HEX	8	9	A	B	C	D	E	F
HEX	BIN	1000	1001	1010	1011	1100	1101	1110	1111
0	0000	€ 128	144	160	◊ 176	À 192	Ð 208	à 224	đ 240
1	0001	129	‘ 145	¡ 161	± 177	Á 193	Ñ 209	á 225	ñ 241
2	0010	‚ 130	’ 146	¢ 162	2 178	Â 194	Ò 210	â 226	ò 242
3	0011	ƒ 131	“ 147	£ 163	3 179	Ã 195	Ó 211	ã 227	ó 243
4	0100	„ 132	” 148	¤ 164	´ 180	Ä 196	Ô 212	ä 228	ô 244
5	0101	… 133	• 149	¥ 165	µ 181	Å 197	Õ 213	å 229	õ 245
6	0110	† 134	- 150	¦ 166	¶ 182	Æ 198	Ö 214	æ 230	ö 246
7	0111	‡ 135	– 151	§ 167	· 183	Ç 199	x 215	ç 231	÷ 247
8	1000	ˆ 136	˜ 152	¨ 168	¸ 184	È 200	Ø 216	è 232	ø 248
9	1001	‰ 137	™ 153	© 169	1 185	É 201	Ù 217	é 233	ù 249
A	1010	Š 138	š 154	ª 170	º 186	Ê 202	Ú 218	ê 234	ú 250
B	1011	‹ 139	› 155	« 171	» 187	Ë 203	Û 219	ë 235	û 251
C	1100	Œ 140	œ 156	¬ 172	¼ 188	Ì 204	Ü 220	ì 236	ü 252
D	1101	141	157	¯ 173	½ 189	Í 205	Ý 221	í 237	ý 253
E	1110	Ž 142	ž 158	® 174	¾ 190	Î 206	p 222	î 238	p 254
F	1111	143	Ÿ 159	¯ 175	¿ 191	Ï 207	B 223	ï 239	ÿ 255

7-4-10 PC-866 (Cyrillic 2) Character Font Table

	HEX	8	9	A	B	C	D	E	F
HEX	BIN	1000	1001	1010	1011	1100	1101	1110	1111
0	0000	А 128	Р 144	а 160	▒ 176	└ 192	╨ 208	р 224	Ё 240
1	0001	Б 129	С 145	б 161	▒ 177	┴ 193	╤ 209	с 225	ё 241
2	0010	В 130	Т 146	в 162	▒ 178	┬ 194	╥ 210	т 226	Є 242
3	0011	Г 131	У 147	г 163	│ 179	├ 195	╙ 211	у 227	є 243
4	0100	Д 132	Ф 148	д 164	┤ 180	─ 196	╘ 212	ф 228	Ї 244
5	0101	Е 133	Х 149	е 165	╡ 181	┼ 197	╒ 213	х 229	ї 245
6	0110	Ж 134	Ц 150	ж 166	╢ 182	╞ 198	╓ 214	ц 230	Ў 246
7	0111	З 135	Ч 151	з 167	╖ 183	╟ 199	╫ 215	ч 231	ў 247
8	1000	И 136	Ш 152	и 168	╕ 184	╚ 200	╪ 216	ш 232	° 248
9	1001	Й 137	Щ 153	й 169	╣ 185	╔ 201	┘ 217	щ 233	· 249
A	1010	К 138	Ъ 154	к 170	║ 186	╩ 202	┌ 218	ъ 234	· 250
B	1011	Л 139	Ы 155	л 171	╗ 187	╦ 203	█ 219	ы 235	√ 251
C	1100	М 140	Ь 156	м 172	╝ 188	╠ 204	▄ 220	ь 236	№ 252
D	1101	Н 141	Э 157	н 173	╜ 189	═ 205	▌ 221	э 237	¤ 253
E	1110	О 142	Ю 158	о 174	╛ 190	╬ 206	▐ 222	ю 238	■ 254
F	1111	П 143	Я 159	п 175	┐ 191	╧ 207	▀ 223	я 239	NBSP 255

7-4-11 PC-852 (Latin 2) Character Font Table

	HEX	8	9	A	B	C	D	E	F
HEX	BIN	1000	1001	1010	1011	1100	1101	1110	1111
0	0000	Ç 128	É 144	á 160	▒ 176	└ 192	đ 208	Ó 224	- 240
1	0001	ü 129	Ĺ 145	í 161	▓ 177	┴ 193	Đ 209	B 225	´´ 241
2	0010	é 130	Í 146	ó 162	▓ 178	┬ 194	Ď 210	Ô 226	˛ 242
3	0011	â 131	Ô 147	ú 163	│ 179	├ 195	Ë 211	Ń 227	ˇ 243
4	0100	ů 132	Ö 148	Ą 164	┤ 180	─ 196	ď 212	ń 228	˘ 244
5	0101	ć 133	Ľ 149	ą 165	Á 181	┼ 197	Ň 213	ň 229	§ 245
6	0110	Ç 134	ľ 150	Ž 166	Â 182	Ă 198	Í 214	Š 230	÷ 246
7	0111	Ł 135	Ś 151	ž 167	Ě 183	ă 199	Î 215	š 231	¸ 247
8	1000	ł 136	ś 152	Ę 168	Ş 184	╚ 200	ě 216	Ŕ 232	° 248
9	1001	ë 137	Ö 153	ę 169	╣ 185	╔ 201	┘ 217	Ú 233	¨ 249
A	1010	Ő 138	Ü 154	¬ 170	║ 186	╩ 202	┌ 218	ŕ 234	· 250
B	1011	ő 139	Ť 155	Ź 171	╗ 187	╦ 203	█ 219	Ű 235	ű 251
C	1100	î 140	ť 156	Č 172	╝ 188	╠ 204	▄ 220	ý 236	Ř 252
D	1101	Ź 141	Ł 157	ş 173	Ż 189	═ 205	J 221	Ý 237	ř 253
E	1110	Ä 142	x 158	« 174	ź 190	╬ 206	Ů 222	ţ 238	■ 254
F	1111	Ć 143	č 159	» 175	┐ 191	¤ 207	■ 223	´ 239	255

7-4-12 PC-858 (Euro) Character Font Table

	HEX	8	9	A	B	C	D	E	F
HEX	BIN	1000	1001	1010	1011	1100	1101	1110	1111
0	0000	Ç 128	É 144	á 160	▒ 176	└ 192	ð 208	Ó 224	─ 240
1	0001	ü 129	æ 145	az 161	▓ 177	┴ 193	Ð 209	ß 225	± 241
2	0010	é 130	Æ 146	ó 162	▓ 178	┬ 194	Ê 210	Ô 226	= 242
3	0011	â 131	ô 147	ú 163	│ 179	├ 195	Ë 211	Ò 227	3/4 243
4	0100	ä 132	ö 148	¨ 164	┤ 180	─ 196	È 212	Õ 228	¶ 244
5	0101	à 133	ò 149	ª 165	Á 181	┼ 197	€ 213	σ 229	§ 245
6	0110	å 134	û 150	º 166	Â 182	ã 198	Í 214	µ 230	÷ 246
7	0111	ç 135	ù 151	¯ 167	À 183	Ã 199	Î 215	þ 231	¸ 247
8	0000	ê 136	ÿ 152	Î 168	© 184	╚ 200	Ï 216	Þ 232	° 248
9	0001	ë 137	Ö 153	⌐ 169	╣ 185	╔ 201	┘ 217	Ú 233	¨ 249
A	0010	è 138	Ü 154	¬ 170	║ 186	╩ 202	┌ 218	Û 234	° 250
B	0011	ï 139	ø 155	1/2 171	╗ 187	╦ 203	▒ 219	Ù 235	1 251
C	0100	î 140	£ 156	1/4 172	╝ 188	╠ 204	▓ 220	ý 236	3 252
D	0101	ì 141	Ø 157	3/4 173	¢ 189	═ 205	¦ 221	Ý 237	2 253
E	0110	Ä 142	× 158	« 174	¥ 190	╬ 206	¦ 222	¯ 238	■ 254
F	0111	Å 143	ƒ 159	» 175	┐ 191	¤ 207	▒ 223	´ 239	SP 255

7-4-13 WPC-1253 (Greek) Character Font Table

	HEX	8	9	A	B	C	D	E	F
HEX	BIN	1000	1001	1010	1011	1100	1101	1110	1111
0	0000	€ 128	144	NBSP 160	° 176	ΐ 192	Π 208	ΰ 224	π 240
1	0001	129	‘ 145	΅ 161	± 177	Α 193	Ρ 209	α 225	ρ 241
2	0010	‚ 130	’ 146	Ά 162	² 178	Β 194	210	β 226	ς 242
3	0011	ƒ 131	“ 147	£ 163	³ 179	Γ 195	Σ 211	γ 227	σ 243
4	0100	„ 132	” 148	¤ 164	΄ 180	Δ 196	Τ 212	δ 228	τ 244
5	0101	… 133	• 149	¥ 165	µ 181	Ε 197	Υ 213	ε 229	υ 245
6	0110	† 134	– 150	¦ 166	¶ 182	Ζ 198	Φ 214	ζ 230	φ 246
7	0111	‡ 135	— 151	§ 167	· 183	Η 199	Χ 215	η 231	χ 247
8	1000	136	152	¨ 168	Έ 184	Θ 200	Ψ 216	θ 232	ψ 248
9	1001	‰ 137	™ 153	© 169	Ή 185	Ι 201	Ω 217	ι 233	ω 249
A	1010	138	154	170	Ί 186	Κ 202	Ϊ 218	κ 234	ϊ 250
B	1011	‹ 139	› 155	« 171	» 187	Λ 203	Ϋ 219	λ 235	ϋ 251
C	1100	140	156	¬ 172	Ό 188	Μ 204	ά 220	μ 236	ό 252
D	1101	141	157	- 173	½ 189	Ν 205	έ 221	ν 237	ύ 253
E	1110	142	158	® 174	Ύ 190	Ξ 206	ή 222	ξ 238	ώ 254
F	1111	143	159	― 175	Ώ 191	Ο 207	ί 223	ο 239	255

7-4-14 WPC-1254 (Turkish) Character Font Table

	HEX	8	9	A	B	C	D	E	F
HEX	BIN	1000	1001	1010	1011	1100	1101	1110	1111
0	0000	€ 128	144	NBSP 160	° 176	À 192	Ğ 208	à 224	ğ 240
1	0001	129	‘ 145	¡ 161	± 177	Á 193	Ñ 209	á 225	241
2	0010	‚ 130	’ 146	¢ 162	² 178	Â 194	Ò 210	â 226	242
3	0011	ƒ 131	“ 147	£ 163	³ 179	Ã 195	Ó 211	ã 227	243
4	0100	„ 132	” 148	¤ 164	´ 180	Ä 196	Ô 212	ä 228	244
5	0101	… 133	• 149	¥ 165	µ 181	Å 197	Õ 213	å 229	245
6	0110	† 134	– 150	¦ 166	¶ 182	Æ 198	Ö 214	æ 230	246
7	0111	‡ 135	— 151	§ 167	· 183	Ç 199	× 215	ç 231	247
8	1000	ˆ 136	˜ 152	¨ 168	¸ 184	È 200	Ø 216	è 232	248
9	1001	‰ 137	™ 153	© 169	¹ 185	É 201	Ù 217	é 233	249
A	1010	Š 138	š 154	ª 170	º 186	Ê 202	Ú 218	ê 234	250
B	1011	‹ 139	› 155	« 171	» 187	Ë 203	Û 219	ë 235	251
C	1100	Œ 140	œ 156	¬ 172	¼ 188	Ì 204	Ü 220	ì 236	252
D	1101	141	157	- 173	½ 189	Í 205	İ 221	í 237	ı 253
E	1110	142	158	® 174	¾ 190	Î 206	Ş 222	î 238	ş 254
F	1111	143	Ÿ 159	¯ 175	¿ 191	Ï 207	ß 223	ï 239	ÿ 255

8. Disassembly

8-1 VFD Module Ass'y와 Post부위 분리방법

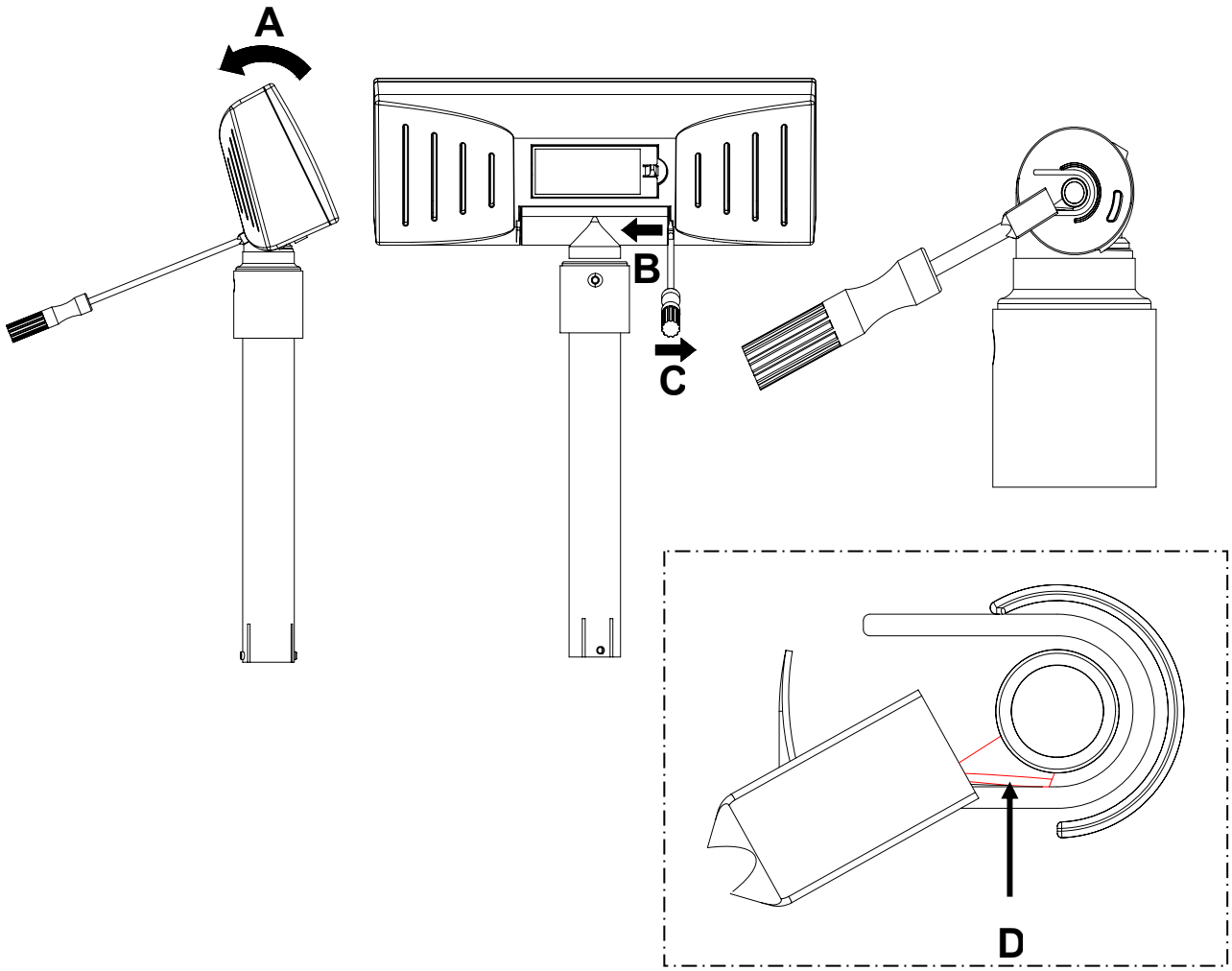

1) **VFD Module Ass'y**를 그림 **A**와 같이 회전시키다.
   회전시 **Stop**되는 부위까지만 이동시키고, 무리한 힘을 가하여
   회전**stopper**부를 넘지 않도록 하십시요 **->** 부품파손발생.
2) **"-"** 드라이버를 이용하여 **ass'y**를 분리할 때 드라이버의 손잡이를
   C방향으로 하여, **Hinge ass'y**가 **B**방향으로 밀려 분리될 수 있도록 합니다.

☞드라이버는 **Hinge ass'y**의 **"D"**형상부 위를 누르도록 하십시요,

8-2 VFD Module Ass'y의 Panel 분리방법

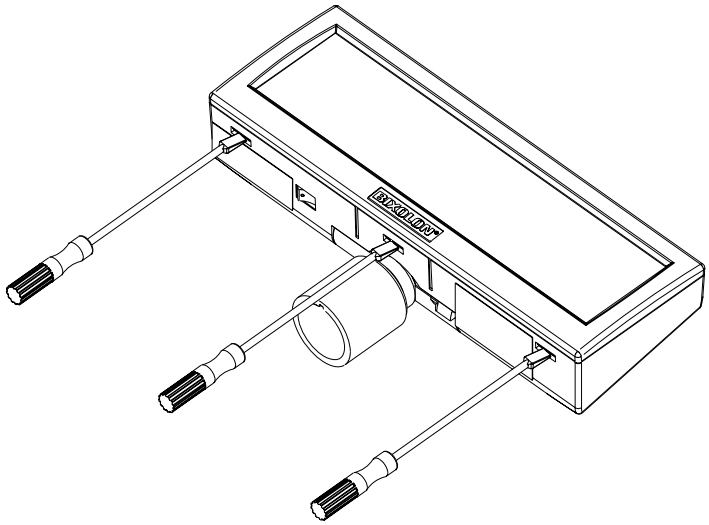

1) "-" 드라이버를 이용하여 그림과 같이 **Pannel**의 **Hook**부위를 밀어 분리한다. 해체시 좌,우측 **1**개소를 분리한후 **Center**를 분리하면 분리가 용이합니다.

☞ 제품분리시 **Tool**의 미끄러짐등에 의한 상해가 발생할 수 있으니 주의바랍니다.

8-3 Pole 분리방법

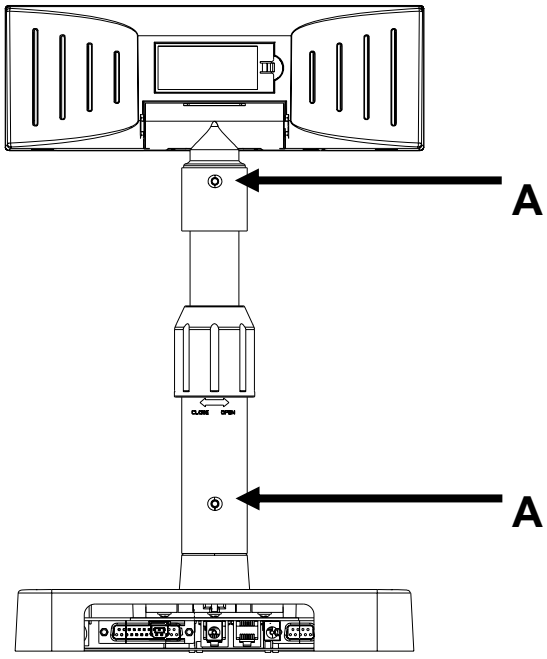

1) 각 **Pole**간 분리시는 "**A**"부위를 눌러 각 부품을 해체합니다.

9. Exploded view and Parts list

9-1 DESK-TOP TYPE VIEW

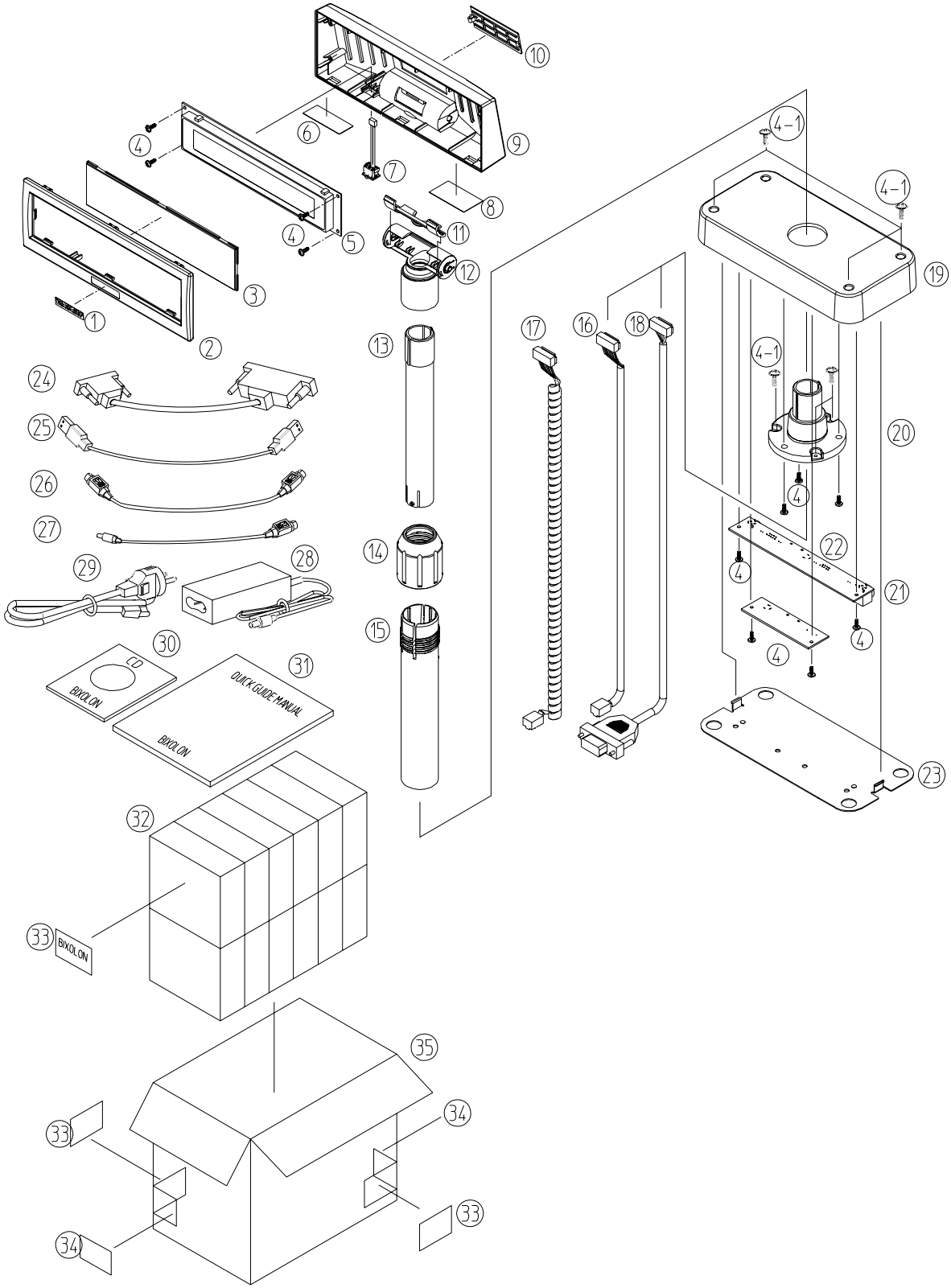

9-2 DESK-TOP TYPE Parts List

NO	CODE	SPECIFICATION	Q'TY	REMARK	Serviceable
1	KA02-00033A	LABEL-LOGO BIXOLON, IV	1		
2	KM10-00124A	FRONT-PANNEL,ABS-FR17 I-VORY 231.3*80.21*14.1	1		
	KM10-00124B	FRONT-PANNEL,ABS-FR17 D-GRAY 231.3*80.21*14.1	1		
3	KM10-00130A	WINDOW,ACRYLIC 207.75*51.42*3.5	1		
4	KC04-00025A	SCREW-TAPPING;M3,L8,Ni	-		
4-1	6002-000174	SCREW-TAPPING;PWH,+,M3,L10	-		
5	K410-00002B	VFD-USB;20LL04DA2U,USB			
	K410-00002A	VFD-SERIAL;20LL04DA2(RS232)			
6	KA10-00002A	LABEL-WARNING;TETRON,R0.175,SILVER,ENGLISH			
7	AS10-00001A	CABLE ASS'Y;POWER S/W ASS'Y 50mm			
8	KA10-00001A	LABEL(R)-RATING,TETRON,T0.175,SILVER,ENGLISH			
9	KM10-00125A	REAR-PANNEL,ABS-FR17 I-VORY 231.26*79.97*42.16			
	KM10-00125A	REAR-PANNEL,ABS-FR17 D-GRAY.26*79.97*42.16			
10	KM10-00128A	DIP-SWITCH-COVER-BCD,ABS-FR17 I-VORY 65.3*26.91*11.51			
	KM10-00128B	DIP-SWITCH-COVER-BCD,ABS-FR17 D-GRAY 65.3*26.91*11.51			
11	KM10-00126A	ANGLE-ADJUST,ABS-FR17 I-VORY 74.63*21.68*13.2			
	KM10-00126B	ANGLE-ADJUST,ABS-FR17 D-GRAY 74.63*21.68*13.2	1	D-GRAY	Y
12	KM10-00129A	HINGE,ABS-FR17 I-VORY 83.7*70.8*36.2	1	I-VORY	Y
	KM10-00129B	HINGE,ABS-FR17 D-GRAY 83.7*70.8*36.2	1	D-GRAY	Y
13	KM10-00120A	POLE-ADJUST,BCD-1000,ABS-FR17,I-VORY,200 x 28.28	1	I-VORY	Y
	KM10-00120B	POLE-ADJUST,BCD-1000,ABS-FR17,D-GRAY,200 x 28.28	1	D-GRAY	Y
14	KM10-00122A	NUT-FIX,ABS-FR17,I-VORY,50.44 x 43.4	1	I-VORY	Y
	KM10-00122B	NUT-FIX,ABS-FR17,I-VORY,50.44 x 43.4	1	D-GRAY	Y
15	KM10-00121A	POLE-MAIN,ABS-FR17,I-VORY,197 x 36.2	1	I-VORY	Y
	KM10-00121B	POLE-MAIN,ABS-FR17,I-VORY,197 x 36.2	1	D-GRAY	Y
16	K610-00005F	USB7P HOUSING,9P MODULE CABLE ASS'Y	1		Y
17	K610-00005A	CABLE ASS'Y;7P HOUSING,8P MODULE CABLE ASS'Y	1		Y
18	K610-00005C	CABLE ASS'Y;D-SUB 9PF,7PHOUSING .DC CABLE ASS'Y,1.8M.(PASS THROUGH TYPE)	1		Y
19	KM10-00123A	BASE-LARGE,ABS-FR17 I-VORY 220.42*105.42*34	1	I-VORY	Y
	KM10-00123B	BASE-LARGE,ABS-FR17 D-GRAY 220.42*105.42*34	1	D-GRAY	Y
20	KM10-00127A	BASE-SMALL,ABS-FR17 I-VORY 75.8*75.8*63.61	1	I-VORY	Y
	KM10-00127B	BASE-SMALL,ABS-FR17 D-GRAY75.8*75.8*63.61	1	D-GRAY	Y
21	AP04-00060A	PCB-SUB-Ass'y ; PBA SUB-BCD-1000S,RS-232	1		Y
22	AP04-00060C	PCB-SUB-Ass'y ; PBA SUB-BCD-1000U,USB	1		Y
23	KP10-00062A	COVER-PCB,SECC CFA T1.0 215.6*100.45	1		Y
24	K604-00086A	CABLE ASS'Y;D-SUB 9PM.25PF,CABLE ASS'Y,1.8M(350 공용)	1		Y
25	K604-00033A	CABLE ASS'Y;USB CABLE ASS'Y,1.8M,A/B TYPE(350 공용)	1		Y
26	K610-00005B	CABLE ASS'Y;3P POWER CABLE ASS'Y,1.8M(350 TYPE)	1		Y
27	K610-00005G	3P/2P POWER CABLE ASS'Y,1.8M(350,270 TYPE)	1		Y
28	K410-00001A	SWITCHING ADAPTER;DSP-10P-05 050100,5V,2A	1		Y
	K404-00007A	SAD06024-UV24V,24V,2.5A,SI-TECH	1		Y
	K402-00008B	SAD03624;24V,1.5A,SI-TECH	1		Y
29	JE39-00060A	CBF LINE CORD,POWER,250MM,BLK,EUROPE	1		Y
	JE39-00058B	CBF LINE CORD,POWER,250MM,BLK,USA	1		Y
	JE39-00064H	CBF LINE CORD,POWER,250MM,BLK,UNITED-KING	1		Y
	JE39-00064E	CBF LINE CORD,POWER,250MM,BLK,CHINA	1		Y
	JE39-00064G	CBF LINE CORD,POWER,250MM,BLK,AUSTRALLIA	1		Y
	JE39-00059D	CBF LINE CORD,POWER,250MM,BLK,AFRICA	1		Y
30	KN04-00006A	INSTALL CD	1		Y
31	KN10-00001A	MANUAL-USER;ENGLISH+GERMAN	1		Y
	KN10-00001K	MANUAL-USER;KOREAN	1		Y
32	KX10-00002A	BOX-DISPLAY;DISPLAY,SW2	1		Y
33	JE68-00113A	LABEL(P)-PALLET,COL,MOJ,T0.1,WHT	3		Y
34	JE68-00114A	LABEL(P)-BLANK,SL-1050V,ART,140,280,100G	2		Y
35	JE69-00107D	BOX(P)-OUTER;SAMSUNG,SRP-350	0.1		Y

9-3 WALL MOUNT TYPE VIEW

–

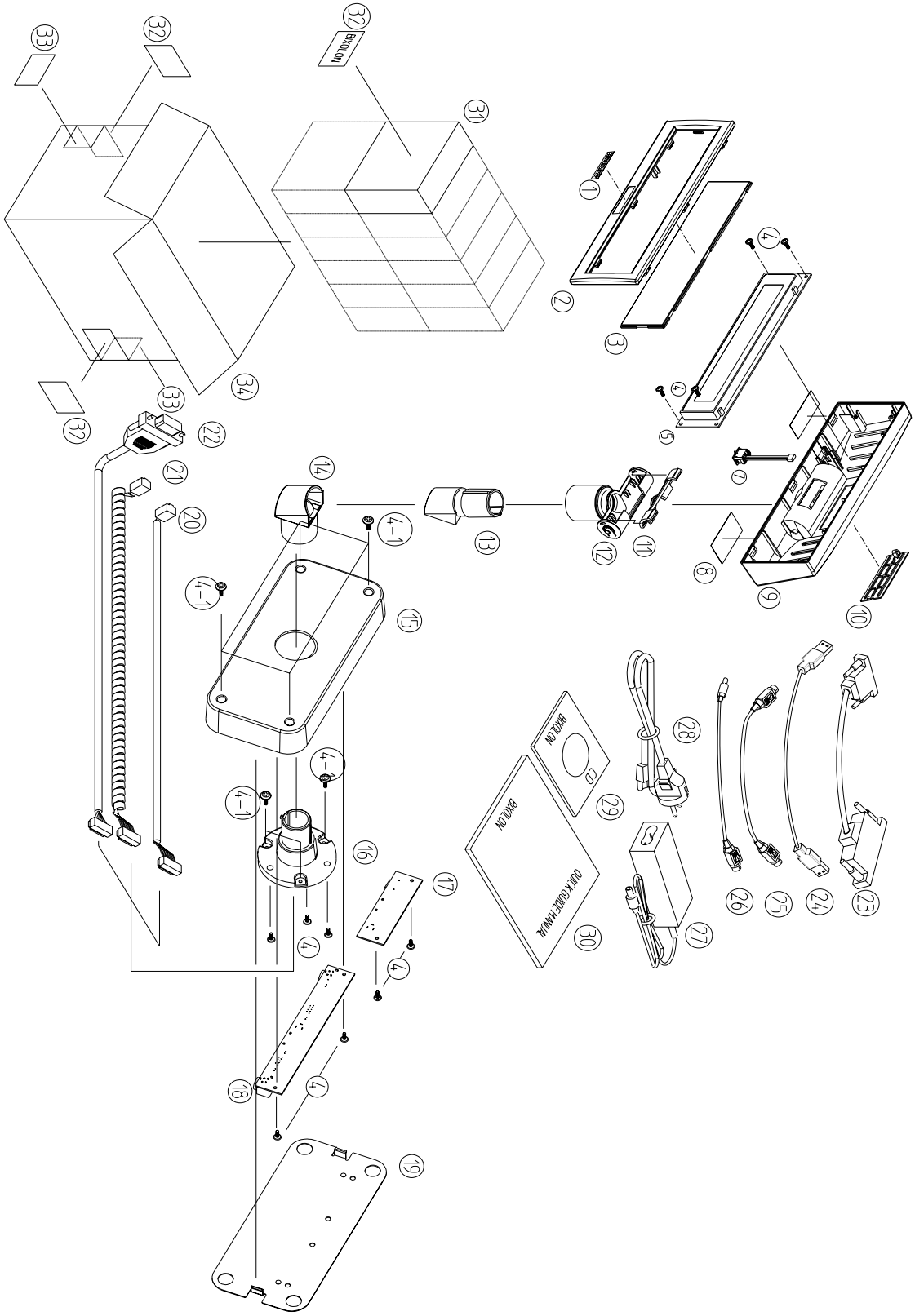

9-4 WALL MOUNT TYPE Parts List

NO	CODE	SPECIFICATION	Q'TY	REMARK	Serviceable
1	KA02-00033A	LABEL-LOGO BIXOLON, IV	1		Y
2	KM10-00124A	FRONT-PANNEL,ABS-FR17 I-VORY 231.3*80.21*14.1	1	I-VORY	Y
	KM10-00124B	FRONT-PANNEL,ABS-FR17 D-GRAY 231.3*80.21*14.1	1	D-GRAY	Y
3	KM10-00130A	WINDOW,ACRYLIC 207.75*51.42*3.5	1		Y
4	KC04-00025A	SCREW-TAPPING;M3,L8,Ni	-		Y
4-1	6002-000174	SCREW-TAPPING;PWH,+,M3,L10	-		Y
5	K410-00002B	VFD-USB;20LL04DA2U,USB	1	USB	Y
	K410-00002A	VFD-SERIAL;20LL04DA2(RS232)	1	SERIAL	Y
6	KA10-00002A	LABEL-WARNING;TETRON,R0.175,SILVER,ENGLISH	1		Y
7	AS10-00001A	CABLE ASS'Y;POWER S/W ASS'Y 50mm	1		Y
8	KA10-00001A	LABEL(R)-RATING,TETRON,T0.175,SILVER,ENGLISH	1		Y
9	KM10-00125A	REAR-PANNEL,ABS-FR17 I-VORY 231.26*79.97*42.16	1	I-VORY	Y
	KM10-00125B	REAR-PANNEL,ABS-FR17 D-GRAY 231.26*79.97*42.16	1	D-GRAY	Y
10	KM10-00128A	DIP-SWITCH-COVER-BCD,ABS-FR17 I-VORY 65.3*26.91*11.51	1	I-VORY	Y
	KM10-00128B	DIP-SWITCH-COVER-BCD,ABS- D-GRAY 65.3*26.91*11.51	1	D-GRAY	Y
11	KM10-00126A	ANGLE-ADJUST,ABS-FR17 I-VORY 74.63*21.68*13.2	1	I-VORY	Y
	KM10-00126B	ANGLE-ADJUST,ABS-FR17 D-GRAY 74.63*21.68*13.2	1	D-GRAY	Y
12	KM10-00129A	HINGE,ABS-FR17 I-VORY 83.7*70.8*36.2	1	I-VORY	Y
	KM10-00129B	HINGE,ABS-FR17 D-GRAY 83.7*70.8*36.2	1	D-GRAY	Y
13	KM10-00110A	POLE ADADJUST-W,ABS-FR17 I-VORY Ø28.37 X 77.47	1	I-VORY	Y
	KM10-00110B	POLE ADADJUST-W,ABS-FR17 D-GRAY Ø28.37 X 77.47	1	D-GRAY	Y
14	KM10-00100A	POLE MAIN-W,ABS-FR17 I-VORY Ø34.8 X 70.29	1	I-VORY	Y
	KM10-00100B	POLE MAIN-W,ABS-FR17 D-GRAY Ø34.8 X 70.29	1	D-GRAY	Y
15	KM10-00123A	BASE-LARGE,ABS-FR17 I-VORY 220.42*105.42*34	1	I-VORY	Y
	KM10-00123B	BASE-LARGE,ABS-FR17 D-GRAY 220.42*105.42*34	1	D-GRAY	Y
16	KM10-00127A	BASE-SMALL,ABS-FR17 I-VORY 75.8*75.8*63.61	1	I-VORY	Y
	KM10-00127B	BASE-SMALL,ABS-FR17 D-GRAY 75.8*75.8*63.61	1	D-GRAY	Y
17	AP04-00060C	PCB-SUB-Ass'y;PBA SUB-BCD-1000U,USB	1		Y
18	AP04-00060A	PCB-SUB-Ass'y;PBA SUB-BCD-1000S,RS-232	1		Y
19	KP10-00062A	COVER-PCB,SECC CFA T1.0 215.6*100.45	1		Y
20	K610-00005F	USB7P HOUSING,9P MODULE CABLE ASS'Y	1		Y
21	K610-00005A	CABLE ASS'Y;7P HOUSING,8P MODULE CABLE ASS'Y	1		Y
22	K610-00005C	CABLE ASS'Y;D-SUB 9PF,7PHOUSING .DC CABLE ASS'Y,1.8M.(PASS THROUGH TYPE)	1		Y
23	K604-00086A	CABLE ASS'Y;D-SUB 9PM.25PF,CABLE ASS'Y,1.8M(350 공용)	1		Y
24	K604-00033A	CABLE ASS'Y;USB CABLE ASS'Y,1.8M,A/B TYPE(350 공용)	1		Y
25	K610-00005B	CABLE ASS'Y;3P POWER CABLE ASS'Y,1.8M(350 TYPE)	1		Y
26	K610-00005G	3P/2P POWER CABLE ASS'Y,1.8M(350,270 TYPE)	1		Y
27	K410-00001A	SWITCHING ADAPTER;DSP-10P-05 050100,5V,2A	1		Y
	K404-00007A	SAD06024-UV24V,24V,2.5A,SI-TECH	1		Y
	K402-00008B	SAD03624;24V,1.5A,SI-TECH	1		Y
28	JE39-00060A	CBF LINE CORD,POWER,250MM,BLK,EUROPE	1		Y
	JE39-00058B	CBF LINE CORD,POWER,250MM,BLK,USA	1		Y
	JE39-00064H	CBF LINE CORD,POWER,250MM,BLK,UNITED-KING	1		Y
	JE39-00064E	CBF LINE CORD,POWER,250MM,BLK,CHINA	1		Y
	JE39-00064G	CBF LINE CORD,POWER,250MM,BLK,AUSTRALLIA	1		Y
	JE39-00059D	CBF LINE CORD,POWER,250MM,BLK,AFRICA	1		Y
29	KN04-00006A	INSTALL CD	1		Y
30	KN10-00001A	MANUAL-USER;ENGLISH+GERMAN	1		Y
	KN10-00001K	MANUAL-USER;KOREAN	1		Y
31	KX10-00002A	BOX-DISPLAY;DISPLAY,SW2	1		Y
32	JE68-00113A	LABEL(P)-PALLET,COL,MOJ,T0.1,WHT	3		Y
33	JE68-00114A	LABEL(P)-BLANK,SL-1050V,ART,140,280,100G	2		Y
34	JE69-00107D	BOX(P)-OUTER;SAMSUNG,SRP-350	0.1		Y

10. System Block Diagrams

10-1 System Block Diagram RS-232

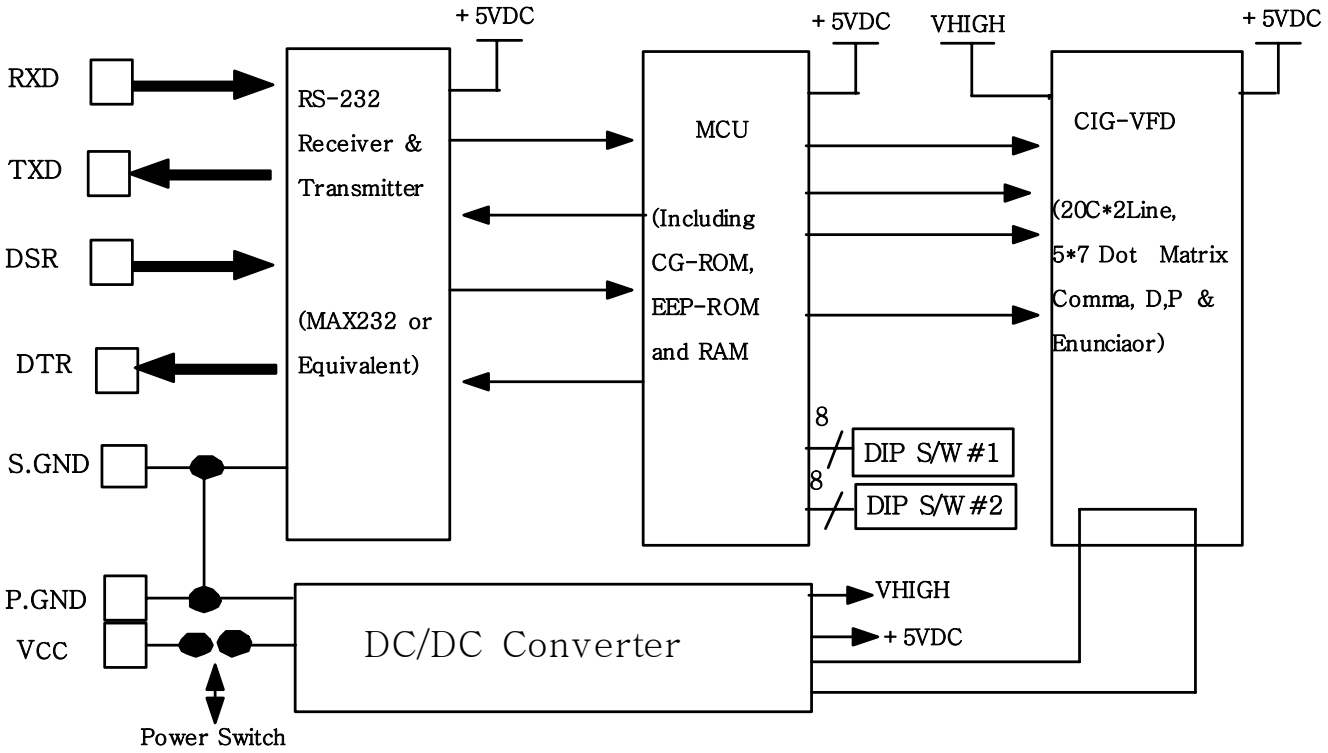

10-2 System Block Diagram USB

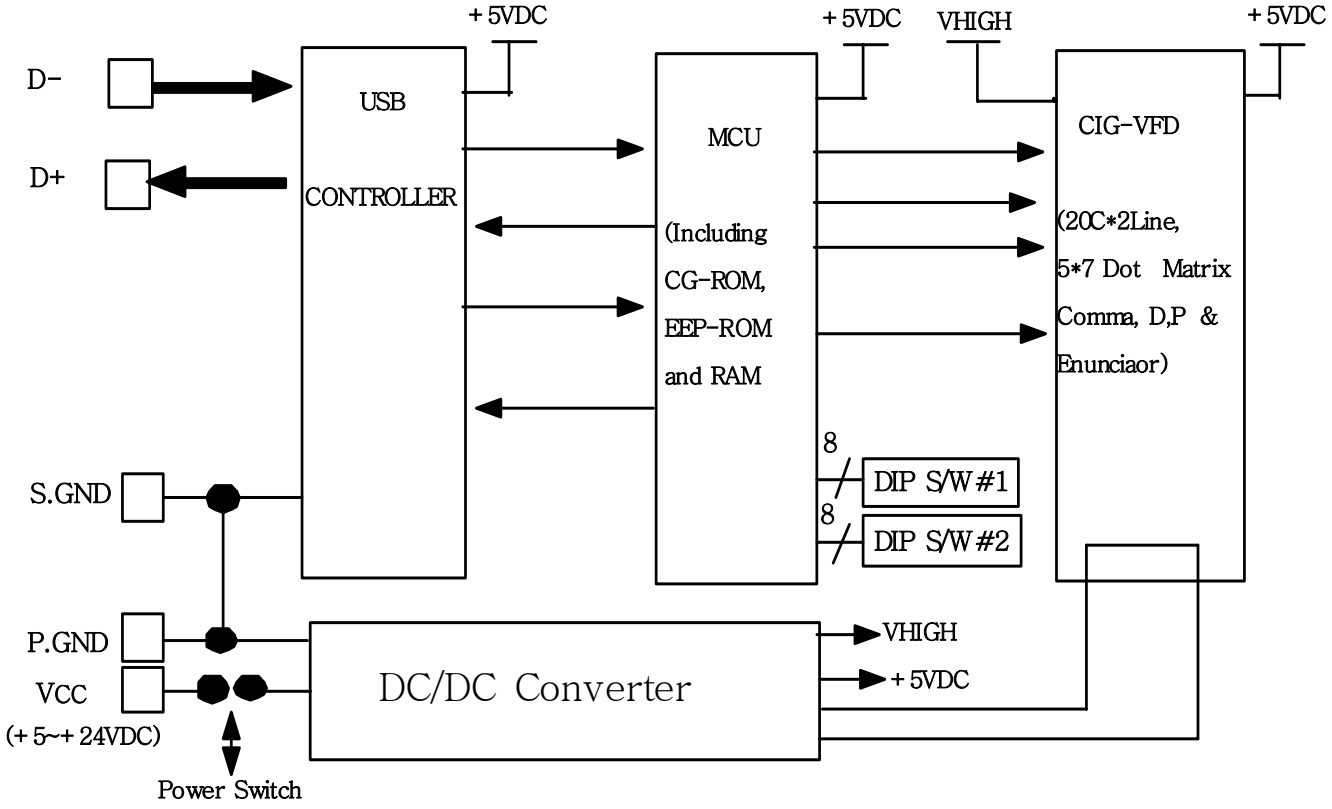

11. Troubleshooting

This chapter describes the methods for troubleshooting in this Receipt Printer.

11-1 Power Problem

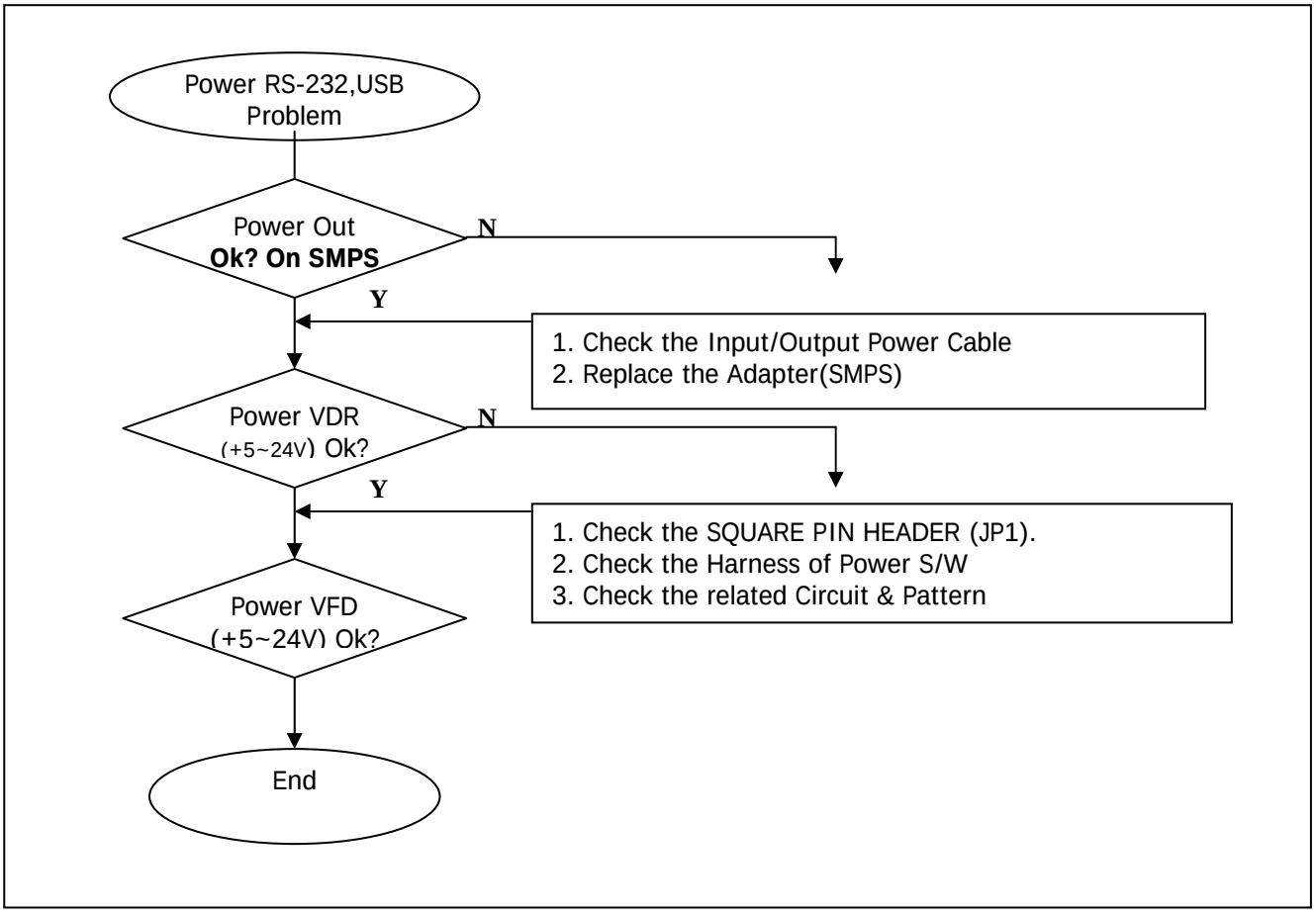

11-2 RS-232C Serial Communication Problem

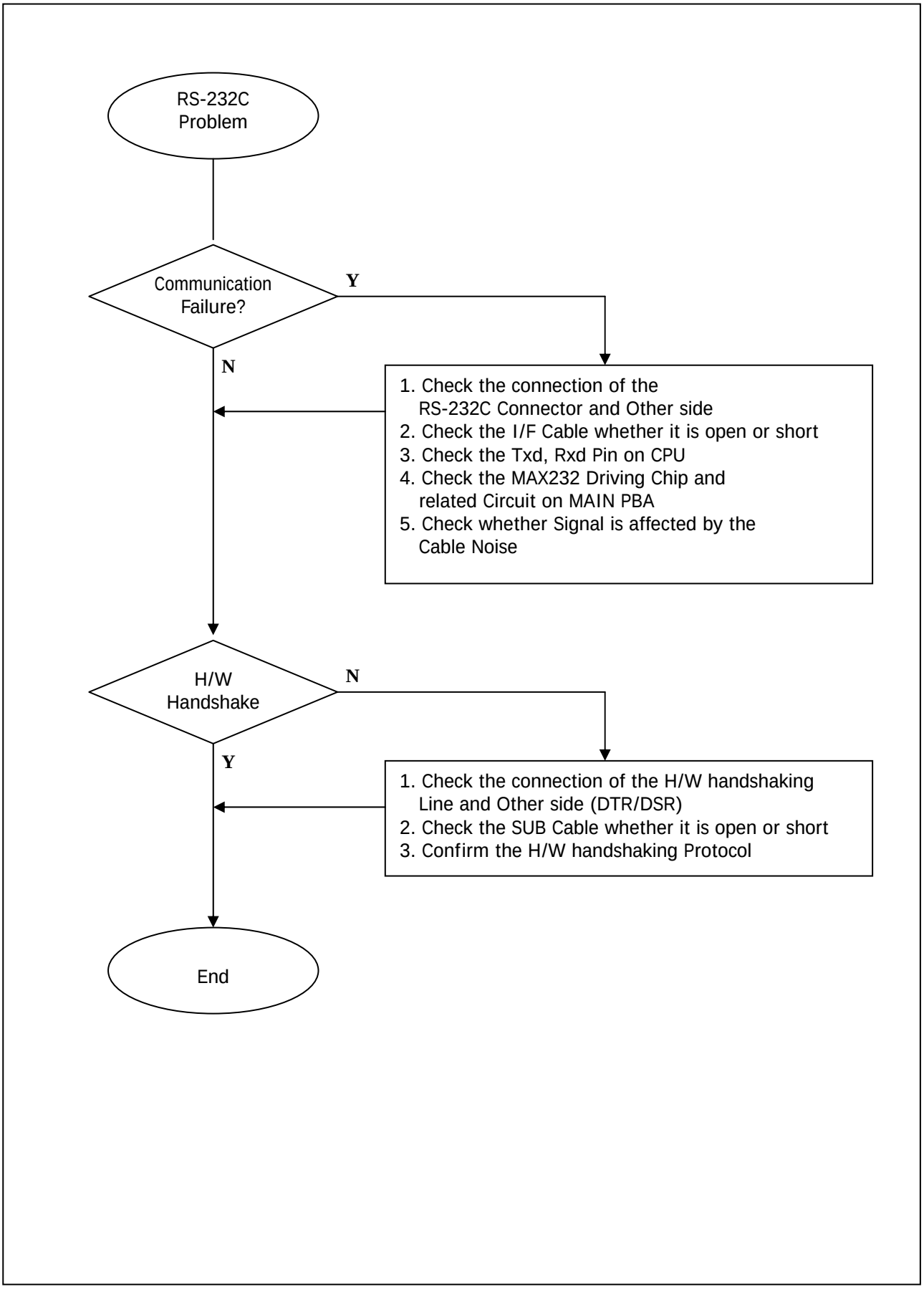

11-3 USB Communication Problem

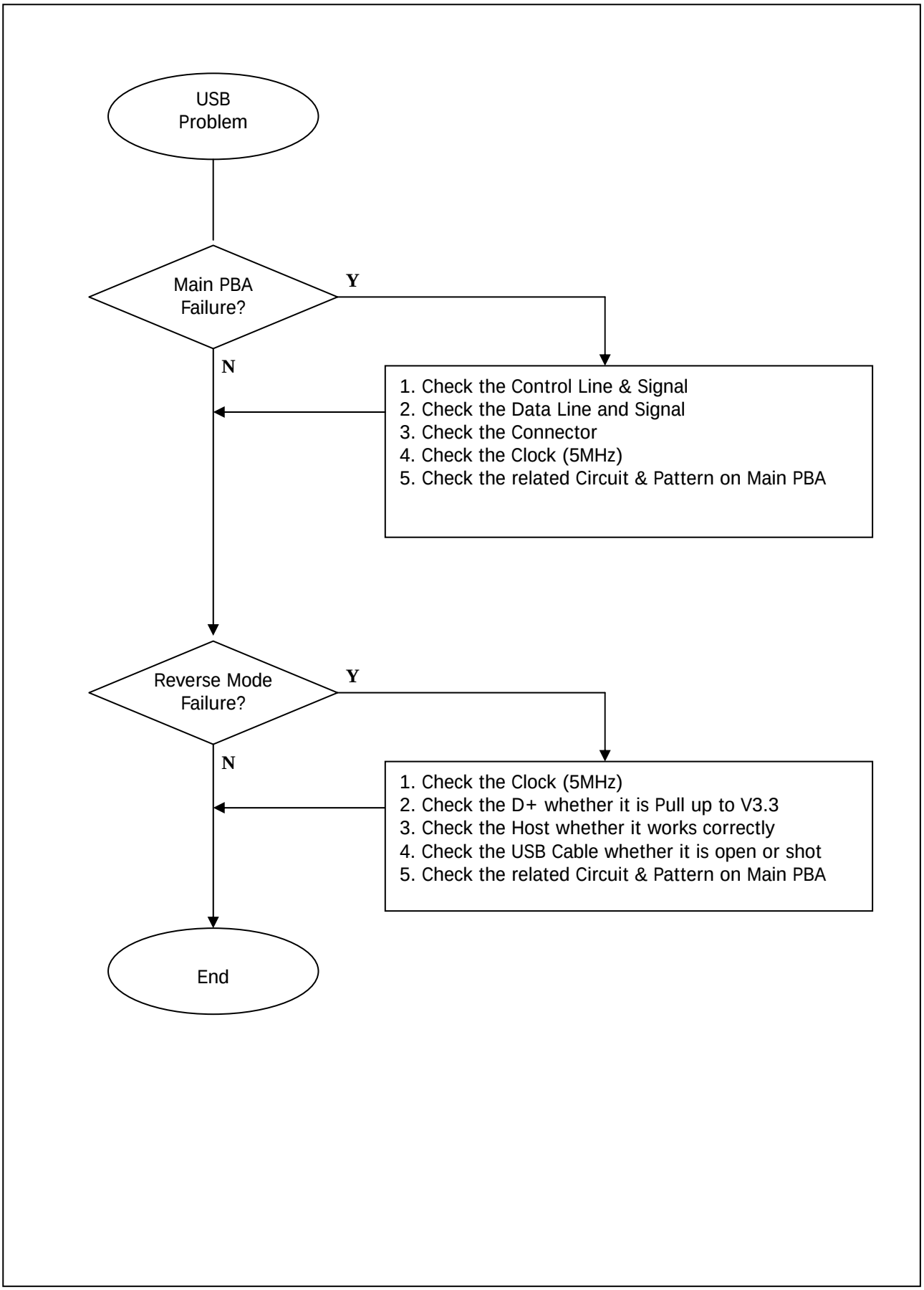

12. PCB Layout and Parts list

12-1 SERIAL PCB(RS-232C) LAYOUT

12-1-1 Component side

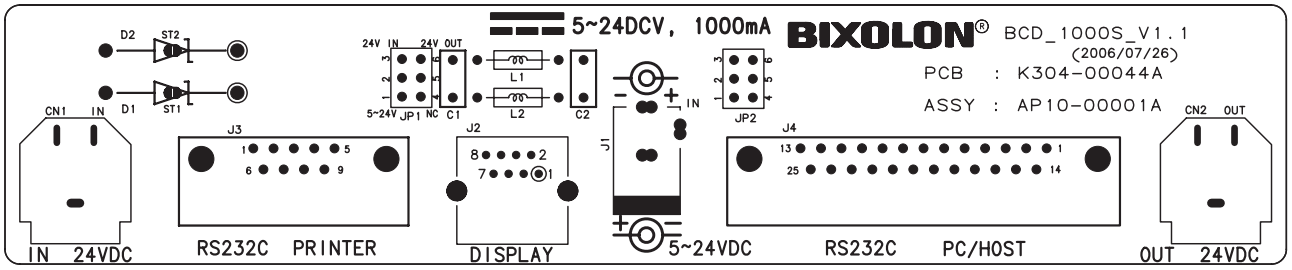

12-1-2 Parts list

CODE NO	DESCRIPTION/SPECIFICATION	Q'TY	REMARK	Serviceable
AP10-00001A	PCB-SUB-Ass'y; PBA SUB-BCD-1000S,RS-232	1		Y
K710-00001A	DIODE-DIP; 1N5404,DIP/D0-214AA,40V 3A	1	D2	Y
K904-00001A	CORE-FERRITE BEAD; AXIAL BC3565	2	L1,L2,	Y
3722-001035	JACK-DC POWER; 3P,6.3mm,-,AG	1	J1	Y
2301-000335	ELEC CAP; C-FILM,PEF;10nF,5%,50V,TP,6x3x8.5mm,	2	C1,C2	Y
K610-00001A	SQUARE PIN HEADER; SPS01-D06A 2,54mm	2	JP1,JP2	Y
3701-000154	CONNECTOR-D SUB; 25P,2R,FEMALE,ANGLE	1	J4	Y
3706-001044	DC-JACK; MDJ-401-3P.FEMALE,3P,#24	2	CN1,CN2	Y
K610-00002A	JACK-MODULAR; RJ45	1	J2	Y
K610-00003A	CONNECTOR-D SUB; 9P,2R,MALE,ANGLE	1	J3	Y
K610-00004A	SHUNT; MJ01,2.54mm	4	(JP1,JP2)	Y

12-1-3 Solder side

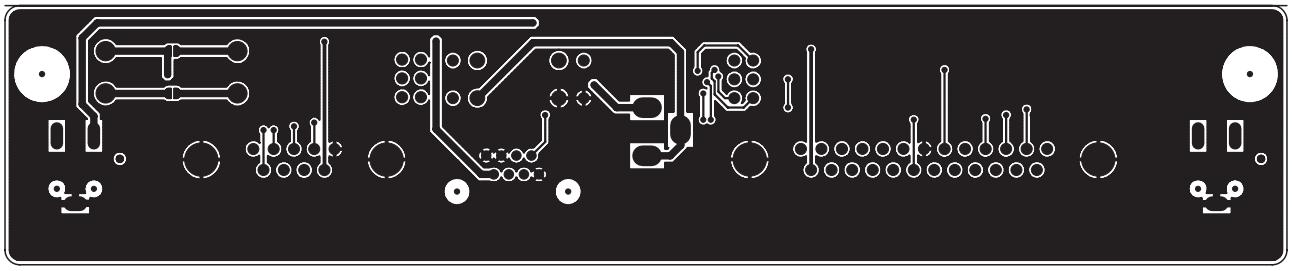

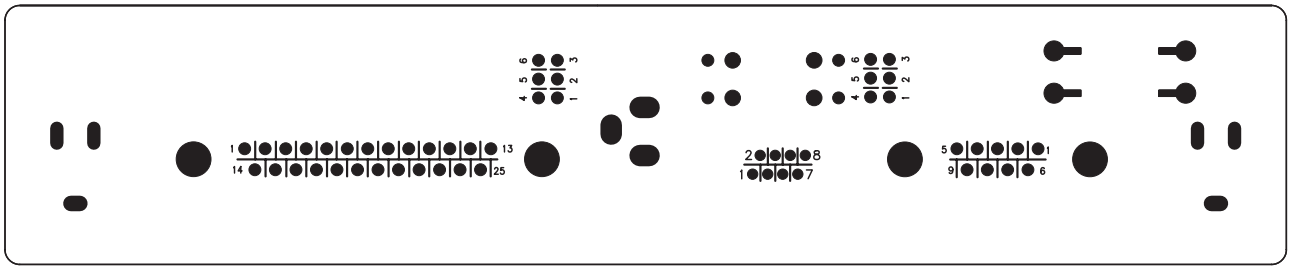

12-1-4 Circuit Diagram(RS-232C)

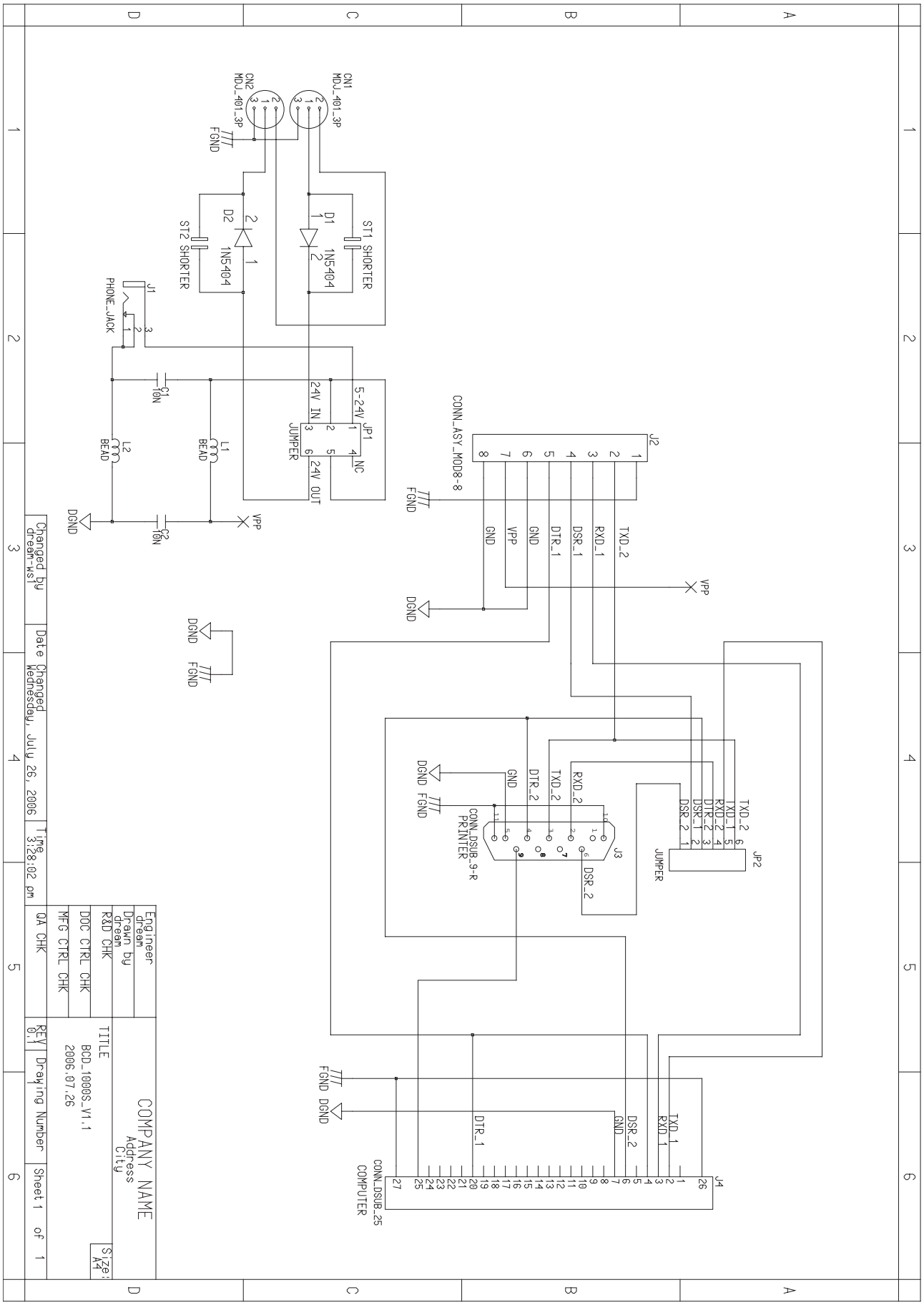

12-2 USB PCB LAYOUT

12-2-1 Component side

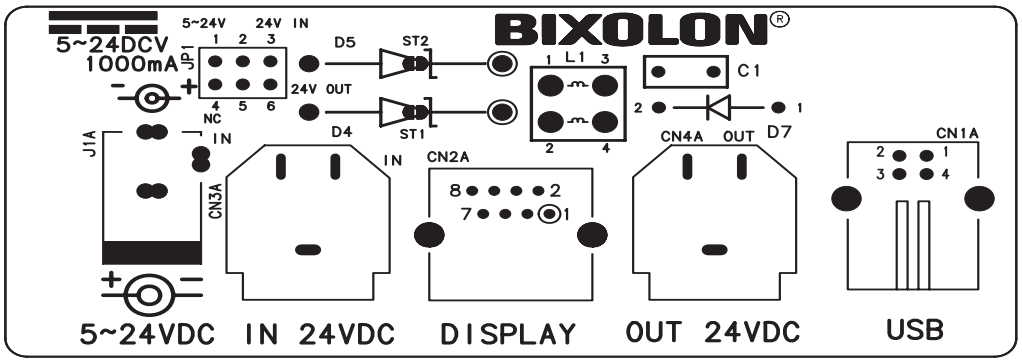

12-2-2 Parts list

CODE NO	DESCRIPTION/SPECIFICATION	Q'TY	REMARK	Serviceable
AP10-00001B	PCB-SUB-Ass'y; PBA SUB-BCD-1000U,USB	1		Y
K704-00005A	DIODE-DIP; 1N4004 1A	1	D7	Y
K710-00001A	DIODE-DIP; 1N5404,DIP/D0-214AA,40V 3A	1	D5	Y
K910-00001A	LINE FILTER; CV035031P	1	L1	Y
3722-001035	JACK-DC POWER; 3P,6.3mm,-,AG	2	J1A	Y
3722-001101	USB CONNECTOR;787780-1 4P/1C B,8.38MM,AU,IVR,#22-28	1	CN1A	Y
3706-001044	DC-JACK; MDJ-401-3P.FEMALE,3P,#24	1	CN3A,CN4A	Y
K610-00002A	JACK-MODULAR; RJ45MJ01,2.54mm	1	CN2A	Y
K610-00004A	SHUNT; MJ01,2.54mm	2	(JP1)	Y
K610-00001A	SQUARE PIN HEADER; MJ01,2.54mm	1	JP1	Y

12-2-3 Component side

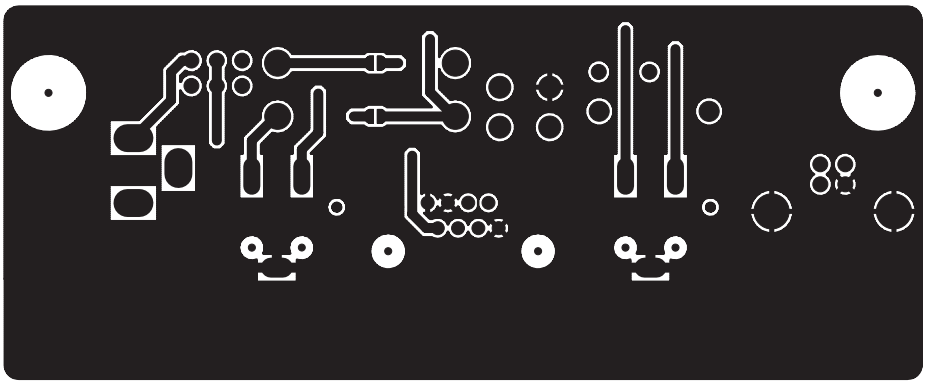

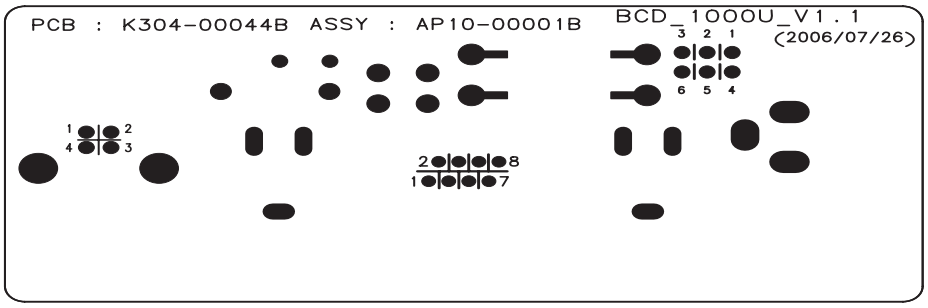

12-2-4 Circuit Diagram (USB)

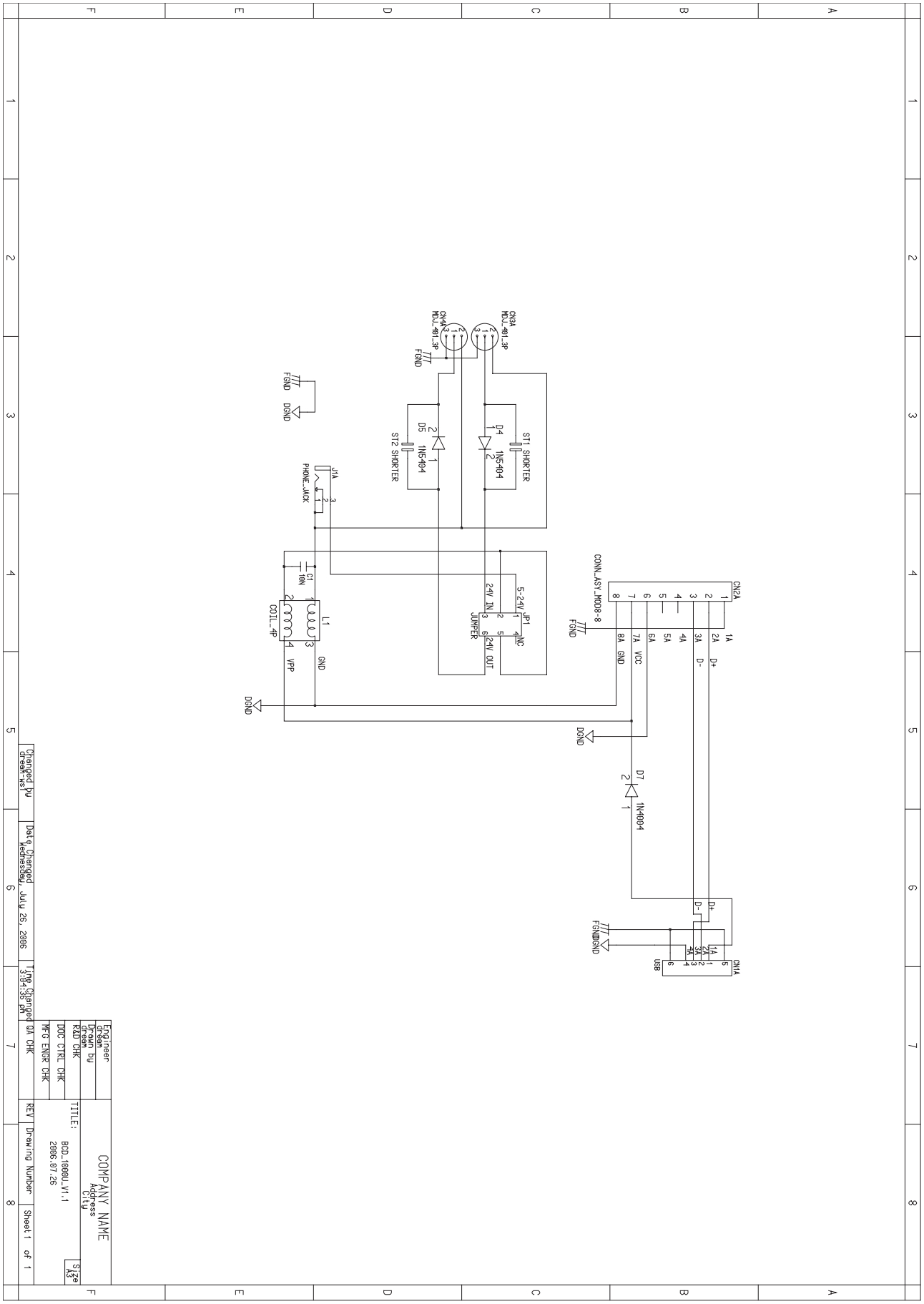

APPENDIX

1. Virtual COM driver installation (Only BCD-1000U)

PC requires software installation when it detects new hardware connected to USB Port.

First, connect BDC-1000U (USB) to PC USB Port and install software and set the conditions as below.

1-1 Connect BDC-1000U (USB) to PC USB Port. Message will pop up Found New Hardware.

1-2 Select Install from a list or specific location (Advanced).

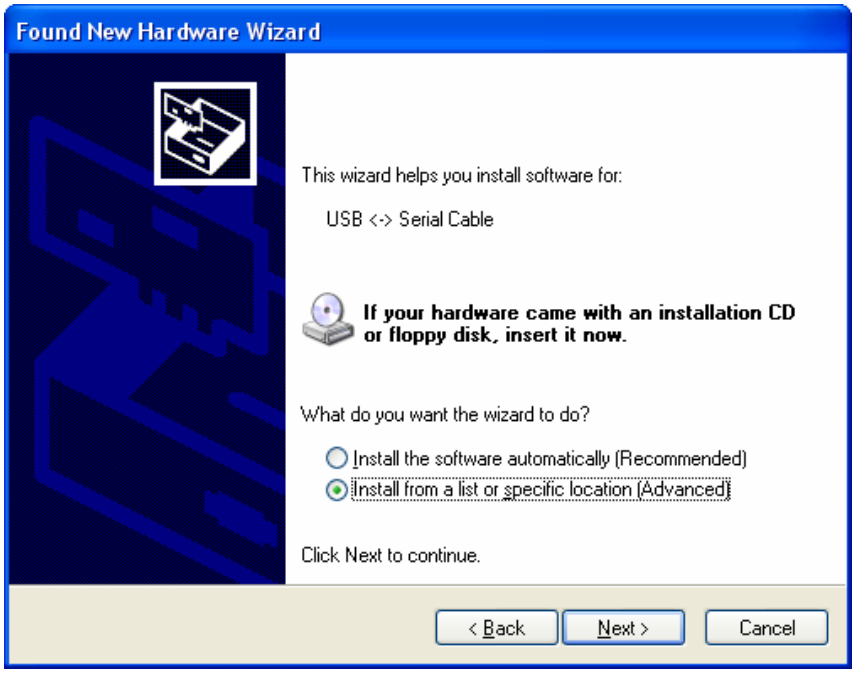

1-3 Select the location VirtualCOM_V9052154 by Browse and select Next.

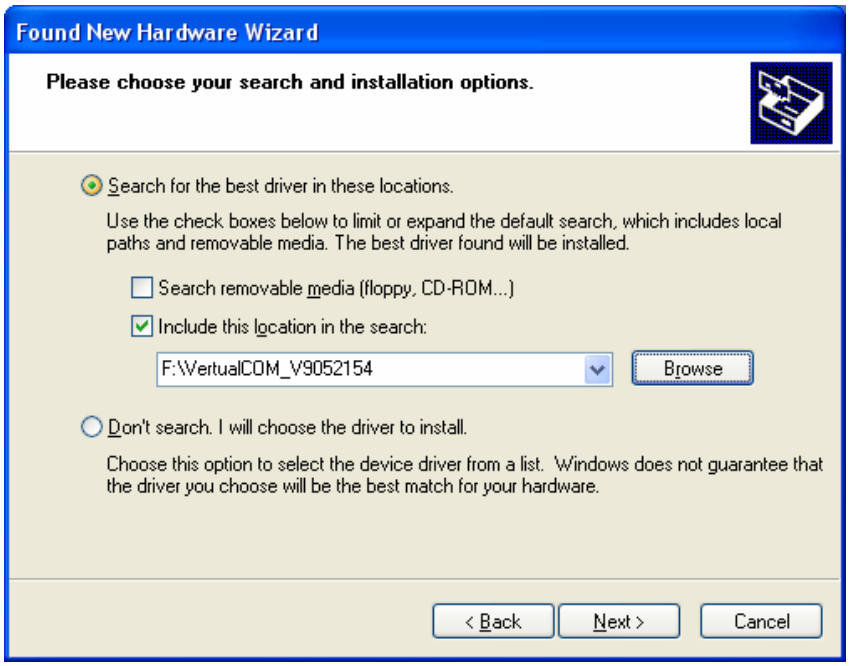

1-4 Message pops up again at right bottom of PC Found New Hardware (USB Serial Port) when it completes.

1-5 Repeat step 1 thru 3 again at Found New Hardware Wizard. It installs twice.

1-6 Open Device Manager (Start > Control Panel > System > Hardware > Device Manager)

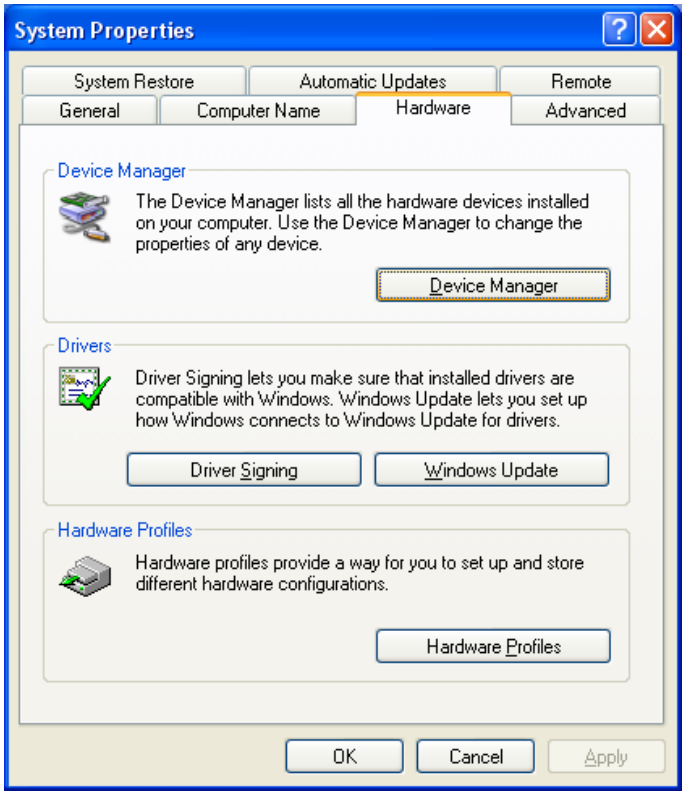

1-7 Select USB Serial Port(COM x) and click on the right button of mouse. Then select Properties. COM port is automatically numbered and it varies from PC port occupation conditions.

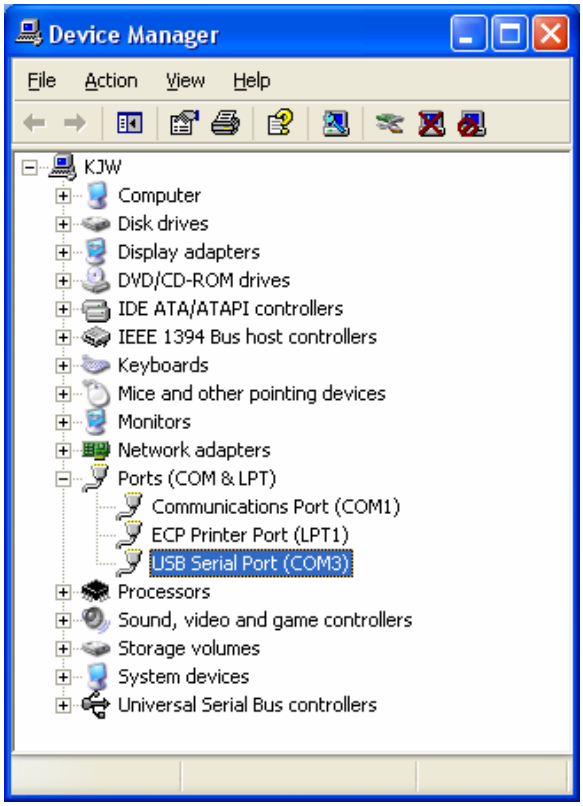

1-8 Set Serial communication conditions and select Advanced.

1-8-1 Preset Serial conditions are 19200 bps, 8 data bit, none parity, hardware flow control.

1-8-2 They must be the same with Master setting and application program Serial setting.

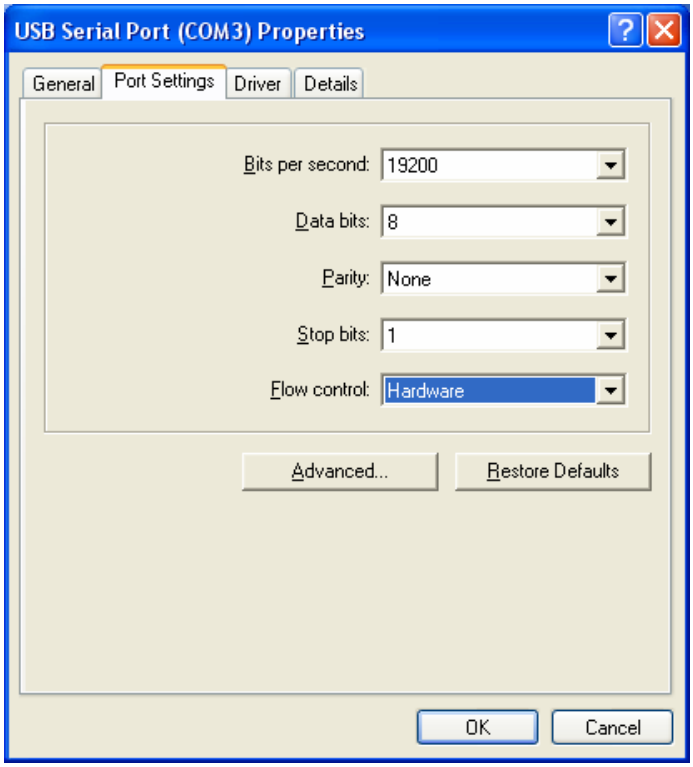

1-9 Check in the boxes of Serial Enumerator and Serial printer. Then select OK. Now Virtual COM driver has been installed successfully.

(Windows 98 does not have the boxes of Serial enumerator and Serial printer)

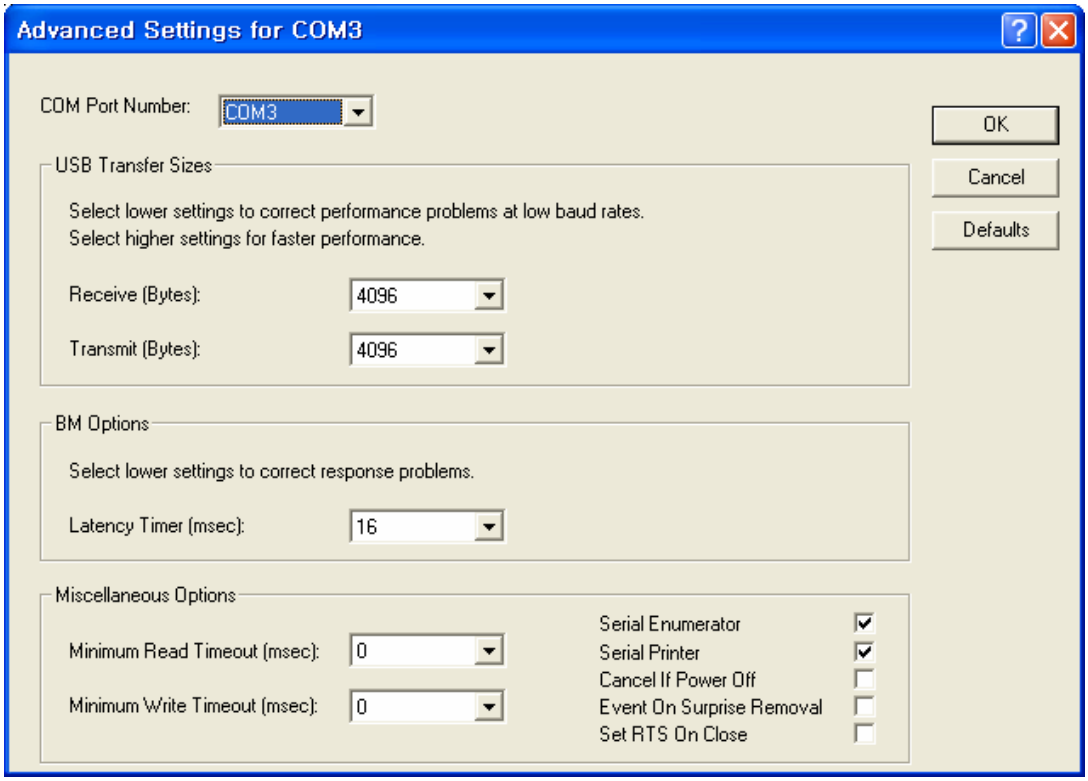

Date : September, 2006

BIXOLON®

SAMSUNG mini printers